Lateral Protection Device (LPD)

Table of contents

- **Introduction**
- **Regarding item no.**
- **Item**
- **Use of item**
- **Strength calculation**
- **Conclusion**
- **Appendix 1**
  - Item drawings
- **Appendix 2**
  - Material datasheet

Introduction

This report is regarding lateral protection device **(LPD)** produced by Bevola. The purpose of the LPD is provide protection for "soft" road users (pedestrians, bike cycle drivers, motorcycle drivers) against getting under the lorry.
The LPD is to be mounted on the side of the lorry according to ECE 73.01.

Regarding item no.:

386150
386151
386152
386153
386154
386155
386156
386157
386160
591001, 591002, 591004, 591020, 591023

Item

The LPD is a system consisting of a number of parts, all delivered by Bevola. The different parts are to be used in combination depended on which truck the LPD is to be mounted. On the mounting brackets the side rail is to be mounted. Mounting brackets and side rail in combination is the LPD. The complete system of mounting bracktes is shown in figure 1.

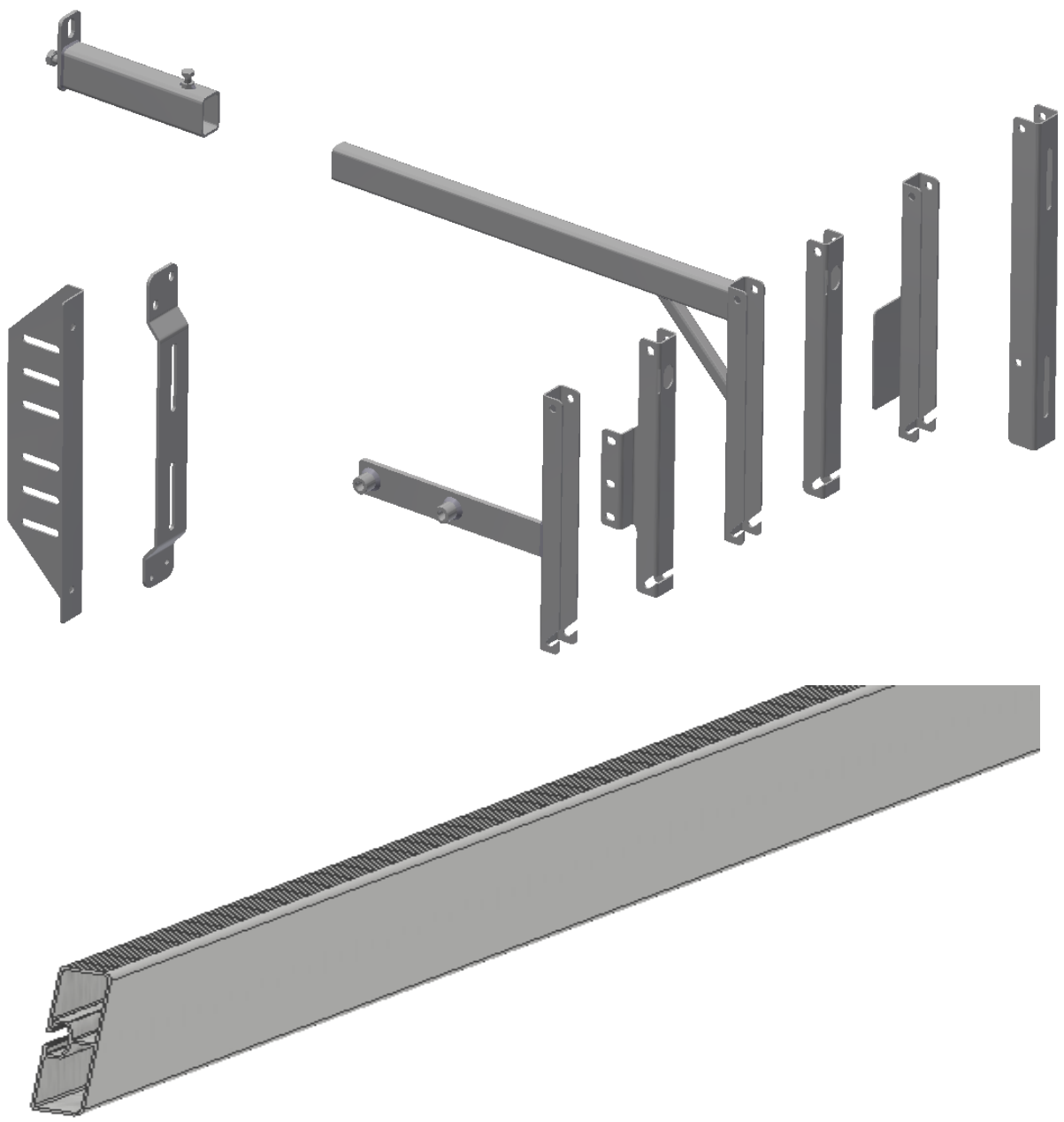

Figure 1

The brackets in table 1 is for mounting either on the chassis of the vehicle or other parts of the vehicle.

Item number	Drawing number	Position for mounting
386150	20170688	Left
386151	20170690	Right
386153/386157	20170765/20170750	Chassis
386154	20170744	Universal mounting
386156	20170745	Exhaust housing side
386160	20190305	Battery box Scania

Table 1

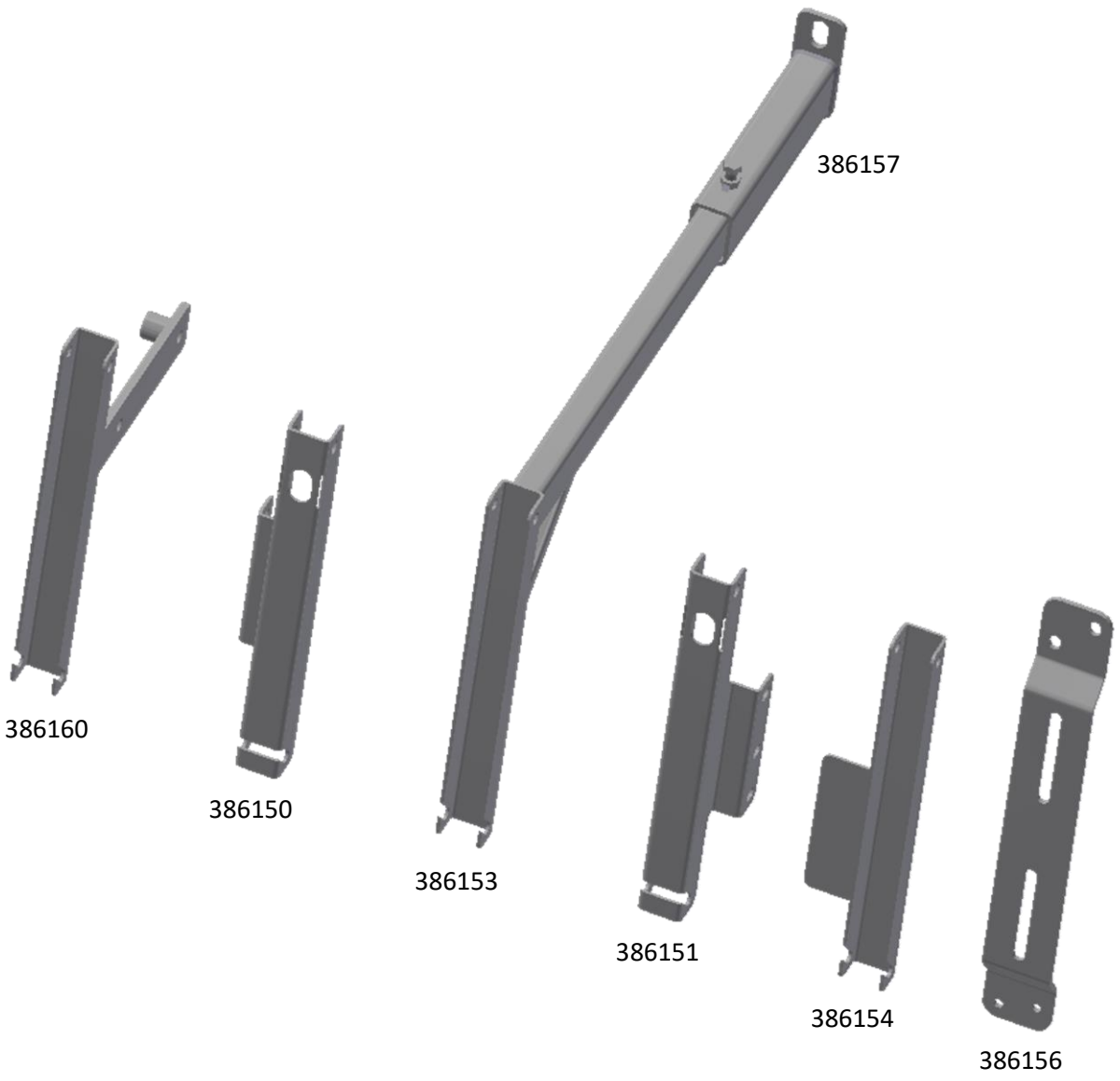

Figure 2

<u>Brackets 386150/386151</u> are to be mounted in the front of the lorry, right behind the front mudguard. There is a bracket for left and right side of the lorry, see table 1.

Figure 3

Brackets 386153/386157, 386157 is to be mounted directly on the chassis in suitable places on the lorry. Item 386153 is to be assembled with 386157 as shown on figure 4.

Figure 4

Brackets 386154 is universal and can be mounted in suitable places on the lorry. The plate can be fixed to the lorry by welding or wholes can be drilled in the plate and the bolted.

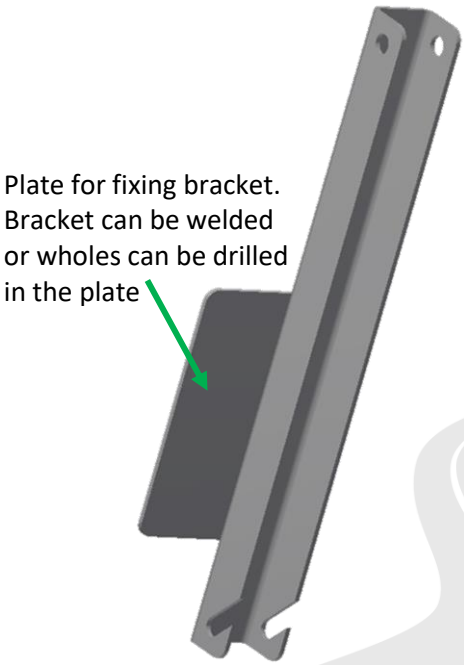

Figure 5

Brackets 386156 is to be mounted on the exhaust pot of the lorry as shown on figure 6.

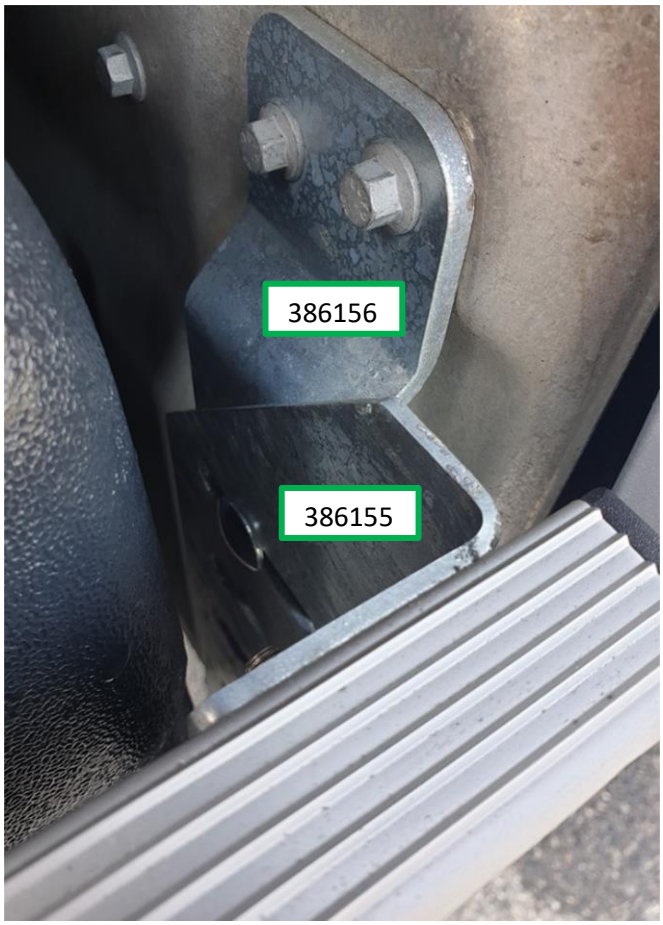

Figure 6

Brackets 386160 is to be mounted on the battery box on the lorry as shown on figure 7.

Figure 7

Brackets 386152/386155, n brackets, 386152 and 386155 the side rail (item number: 591001) is to be assembled. When the side rail is assembled it can be assembled with the brackets on the lorry (brackets table 1).

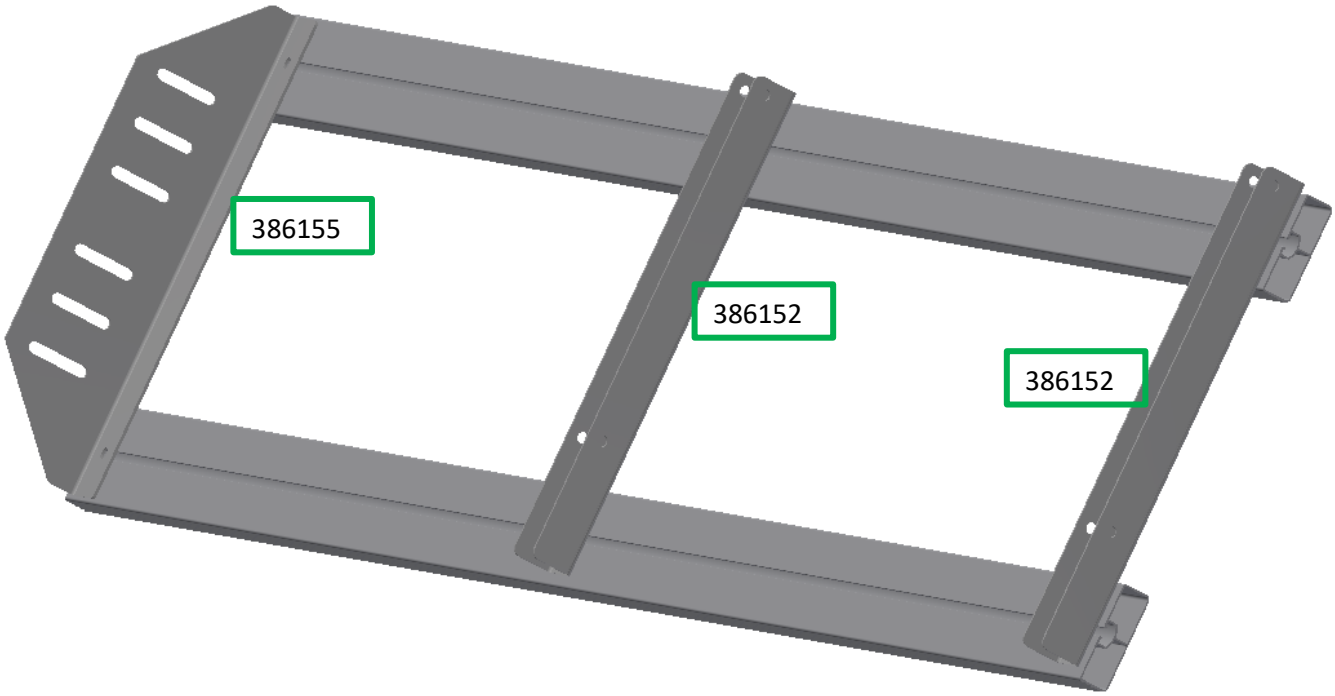

Figure 8

Brackets 386155 and 386156 are assembled exclusively and can not be assembled with other brackets. Bracket 386152 is to be assembled with all other brackets in table, except 386156.

Use of item

The LPD has to be installed on the vehicle in accordance with regulative ECE 73.01.

Strength calculation

The calculations below are made according to ECE 73.01.

Lateral support arm

Calculation of stress in the lateral support arm.

Material: S235JR
fyd = Yield stress = $235\,N/mm^2$
F : Force applied to the pin

$F = 1000$ N
The FEA-calculation is made using the solver in Inventor 2018. A force of 1000 N is applied to the design. The force is applied as indicated by the yellow arrow on figure 9.

Figure 9 shows the combined stress in the design of the lateral support arm. Blue is no stress at all and red is f_{yd} or worse.
Applying the force F directly on the design in the worst possible place, shows the design is fare from critical stress levels.
The highest stress levels occurs where the vertical profile is being bend over the stiffening of the corner. This only natural and stress levels are nowhere critical levels reaching approx. 100MPa.
At the end of the profile where the profile is exposed for a point Force, the highest stress levels can be seen. In practice this will never occur.
The applied force F must be approx. 2000N before being in the region of critical stress in the areas already indicated.

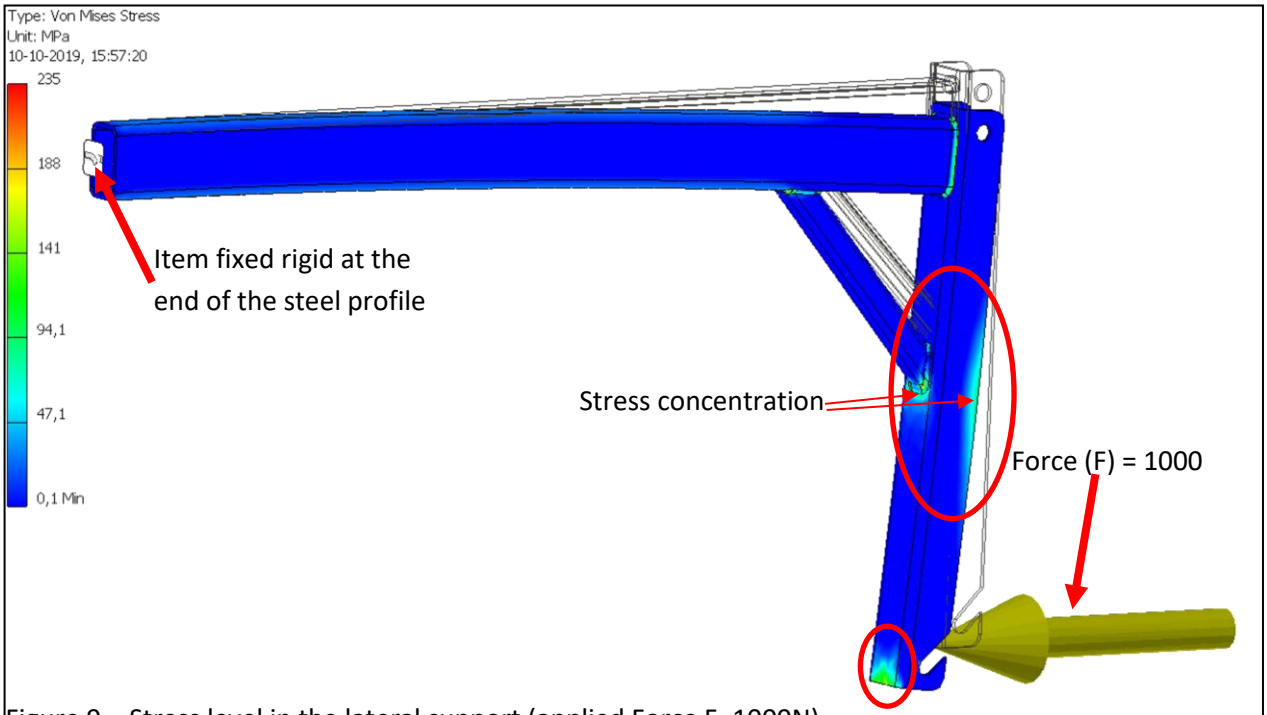

Figure 9 – Stress level in the lateral support (applied Force F=1000N)

Figure 10 below shows a maximum displacement of the design applying 1000 N is approx. 5mm.

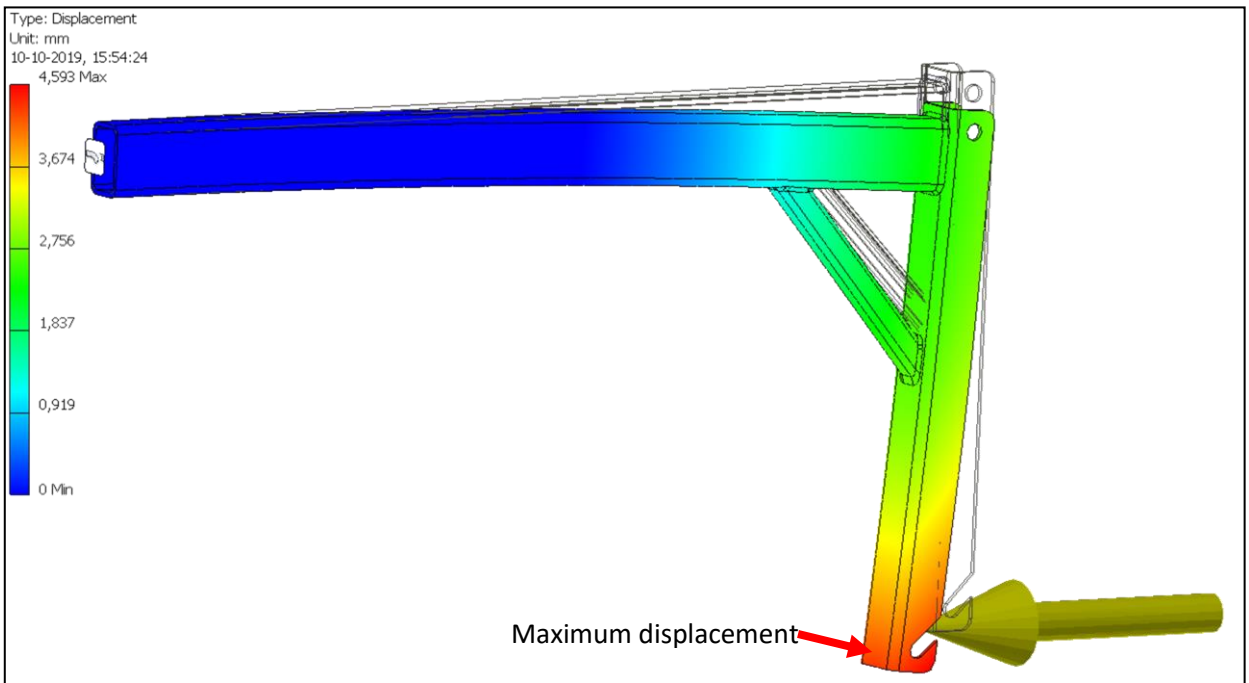

Figure 10 – displacement of the lateral support (applied Force F=1000N)

Figure 11 below shows the safety factor of the design applying a force F = 1000 N. the safety factor is approx. 3

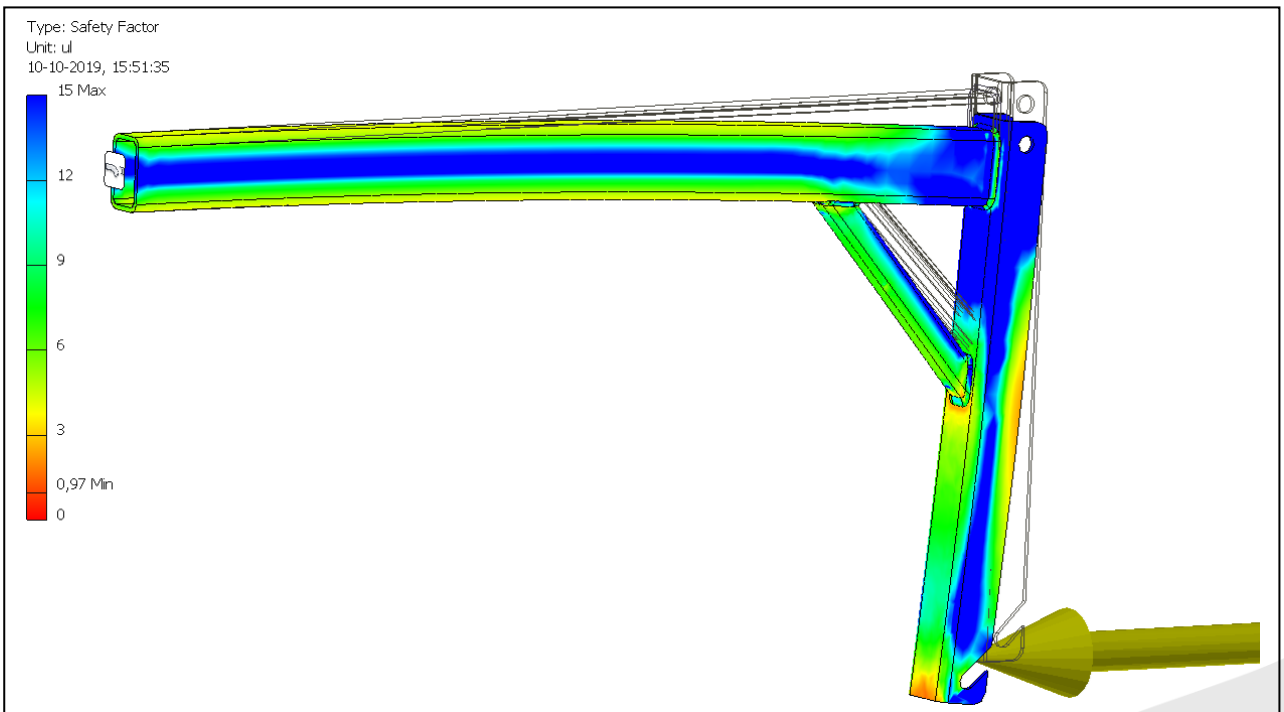

Figure 11 – safety factor of the design (applied Force F=1000N)

The remaining item numbers described above is to be mounted directly on the lorry and have not been submitted further investigation.
The mounting bracket shown on figure 12 is made especially for Scania trucks.
The two picture in the top row indicates the tensions applying a force of 1000 N in each end of the mounting bracket. There is some areas indicating high tension. The areas are quit limited and are most likely to be singularities.
Having a look at the displacement of the bracket shows a displacement of 2,5mm in the end with the longest to the mounting point. The safety factor is approx. 1 in the area around the welding.

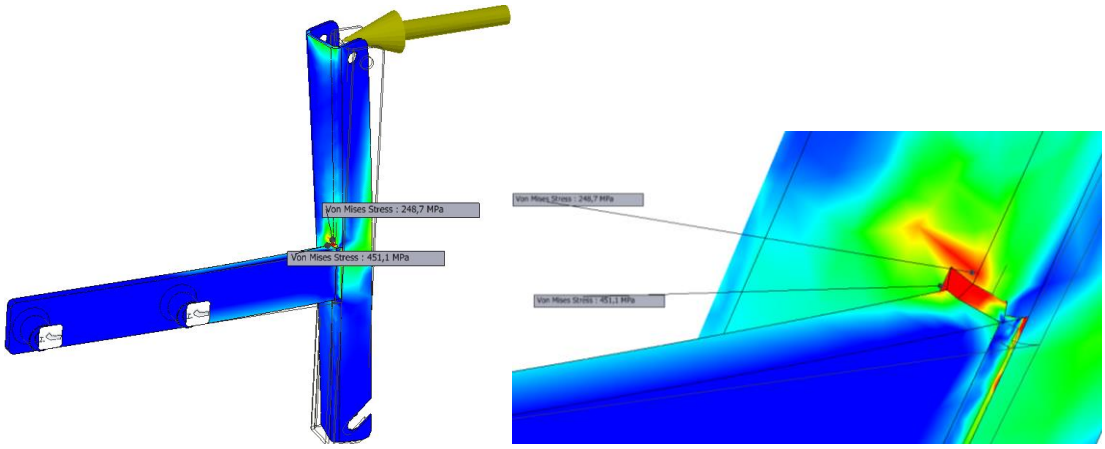

Figure 12

High stress levels are indicated. Looking at the place of the high stress level, it is in the welding zone. Excluding the welding from the analysis all high stress levels do not appear. Therefor the values shown is a singularity, and is not to be considered.

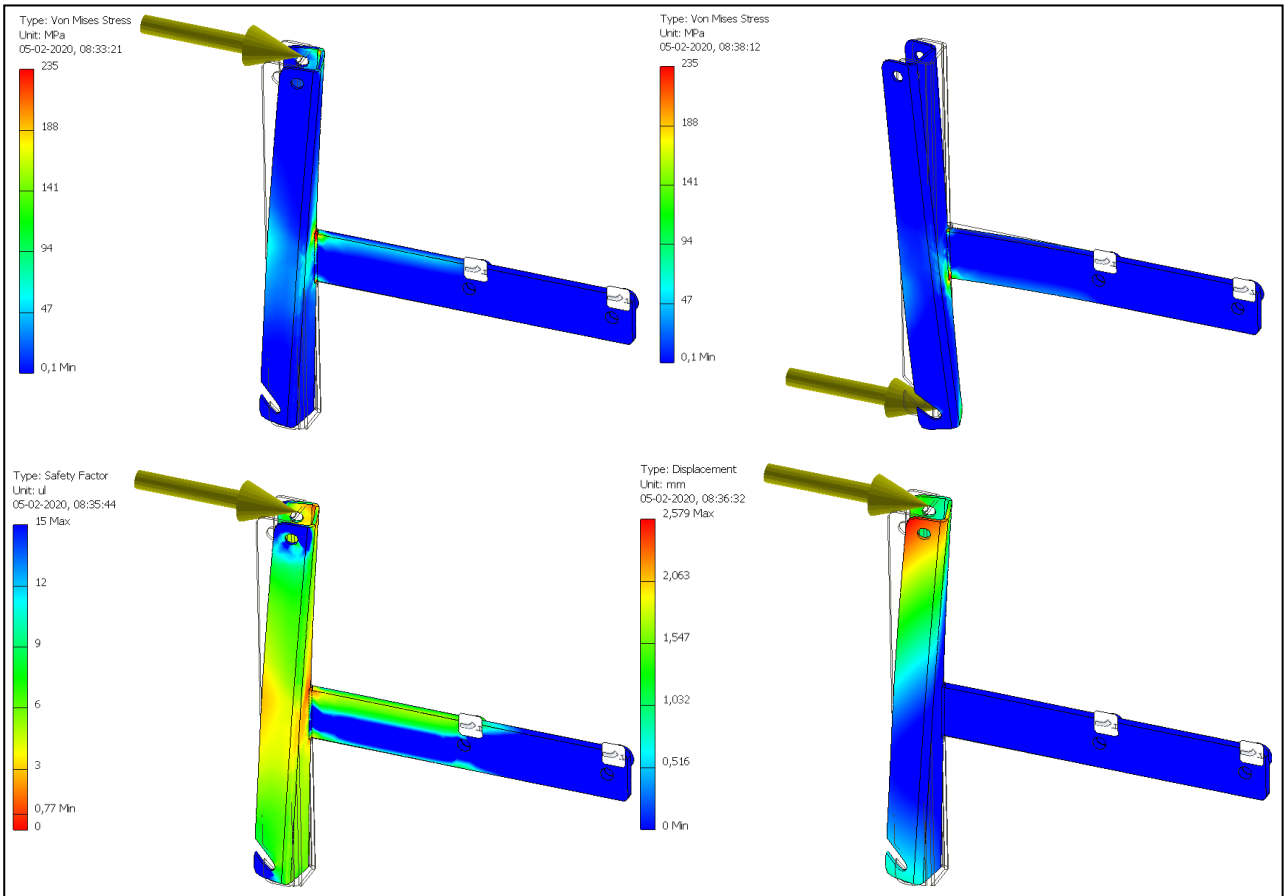

Figure 13

The remaining item numbers described above is to be mounted directly on the lorry and have not been submitted further investigation.

Side rail – Item Number 591001

The side rail is an aluminium profile, as shown on figure 14.

Data used in the calculation

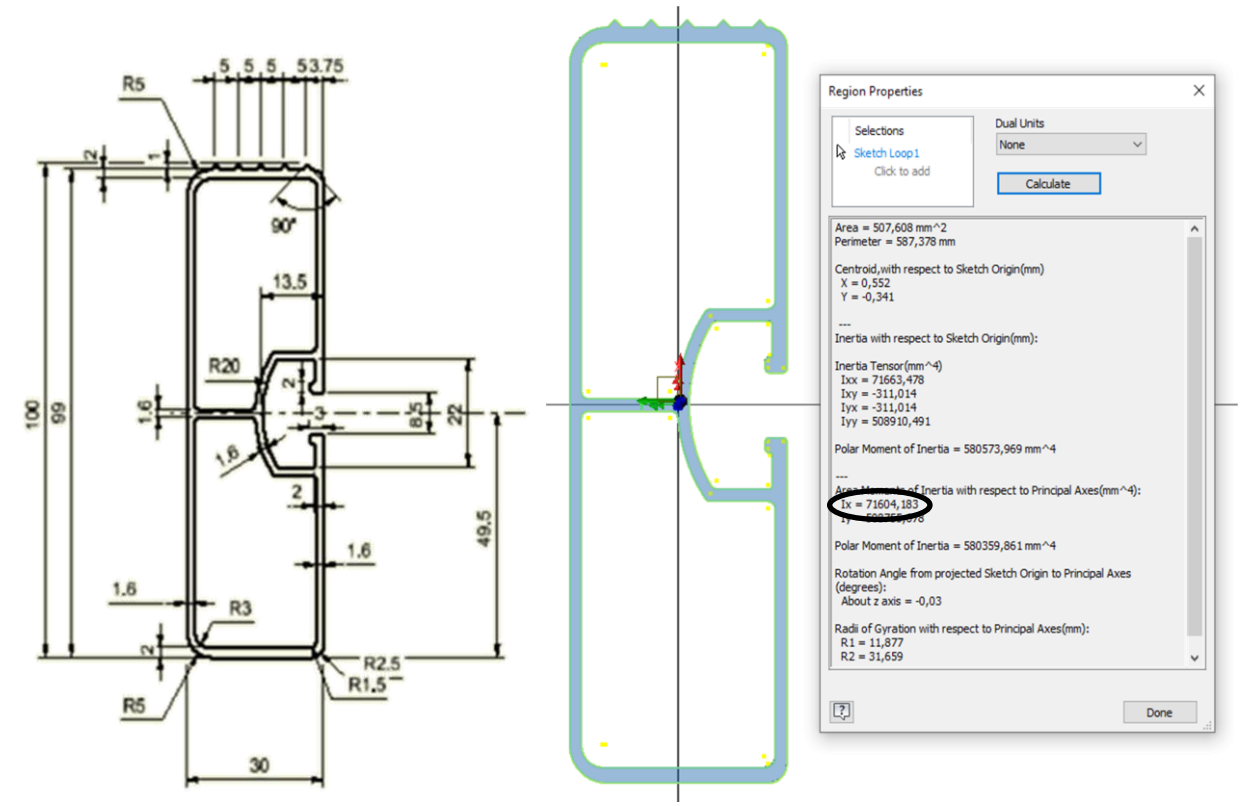

Figure 14 – side rail profile - 591001

Material: AlMgSi0,5 T6

fyd = Yield stress = $130 - 180\ N/mm^2$ $(appendix\ 3)$

$I_x = 71.604{,}2mm^4$ (figure 7)

$$W_x = \frac{I_x}{y} = \frac{71.604{,}2mm^4}{15mm} = 4.773{,}6mm^3$$

E_{Al} = 69.500 N/mm^2 (appendix 3)

L_{sp}= length between support points

Max length between support points using a force F = 1000 N. In the calculation the lower value for f_{yd} is used.

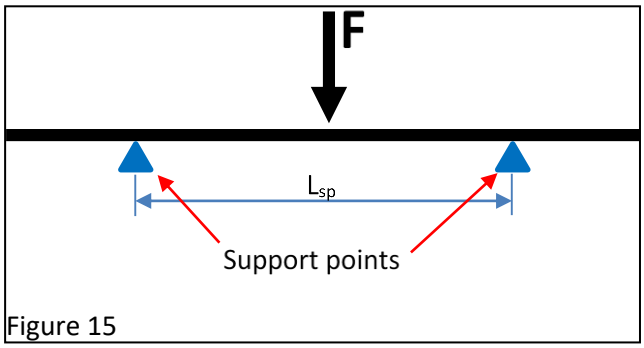

Figure 15

$$\sigma = f_{yd} = \frac{M}{W_x} = \frac{F * L_{SP}}{4 * W_x}$$

↓

$$L_{sp} = \frac{4 * W_x * f_{yd}}{F}$$

$$L_{sp} = \frac{4 * 4.773{,}6mm^3 * 130\,N/mm^2}{1000N} = 2.484mm$$

Max deflection

$$u = \frac{F * {L_{SP}}^3}{48 * E_{Al} * I_x}$$

$$u = \frac{1000N * 2.848mm^3}{48 * 69.500\,N/mm^2 * 71.604{,}2\,N/mm^2} = 97mm$$

Max length outside the support points using a force F = 1000 N. In the calculation the lsower value for f_{yd} is used.

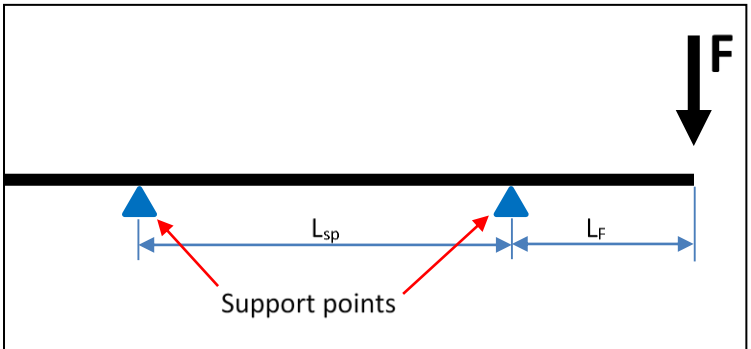

Figure 16

$$\sigma = f_{yd} = \frac{M}{W_x} = \frac{F * L_F}{W_x}$$

↓

$$L_F = \frac{W_x * f_{yd}}{F}$$

$$L_F = \frac{4.773{,}6mm^3 * 130\,N/mm^2}{1000N} = 621mm$$

Max deflection

$$u = \frac{F * {L_F}^2}{3 * E_{Al} * I_x}(L_{sp} + L_F)$$

$$u = \frac{1000N * (621mm)^2 * (2848 + 621)mm}{3 * \ 69.500\, N/mm^2 * \ 71.604{,}2\, N/mm^2} = \ 90mm$$

$$u_{max} = 30mm$$

If u_{max} = 30mm - > L_F = 373mm -> $L_{F_{max}} = 370mm$

The maximum distance (L_F) from the support point to the end of the aluminum profile must be no longer than 370mm, applying a force of 1000 N as indicated and not exceeding f_{yd}.

Conclusion

The design described above is according to ECE 73.01, and will fully meet the requirements regarding strength as required in ECE 73.01.

A/S BEVOLA

MSc in Mechanical Engineering
Lars Rasmussen
16.02.2023

APPENDIX 1

Rev.	Description	Zone	Date	Initials	Checked date	Checked by
A	Første udgave.					
B	Overflade ændret til varmgalv.		18-01-2019	JP		
C	20170753 ->4800355, 20170752->303368, "blank"->4800356, 20170751 (svejsemøtrik)->303367(alm sort møtrik)		29-08-2019	MAS		

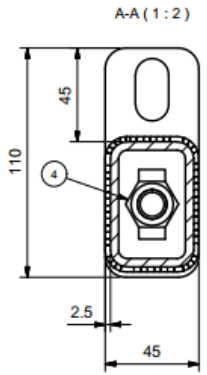

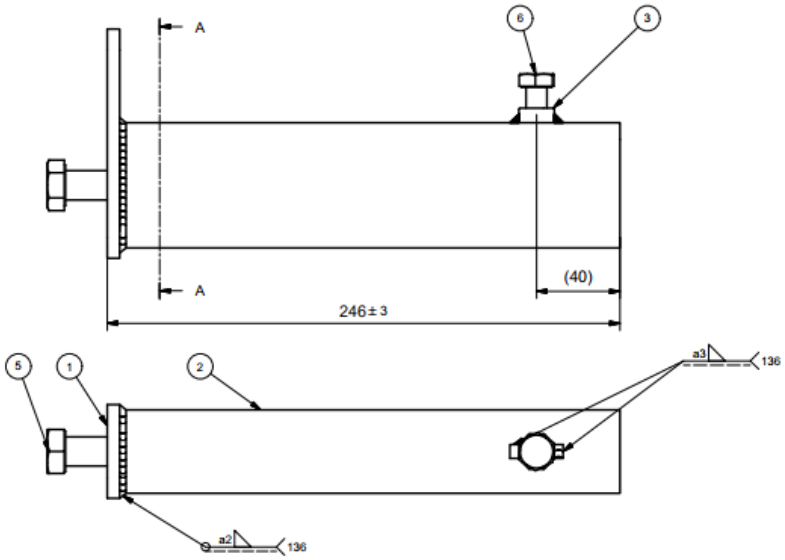

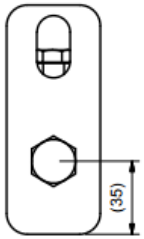

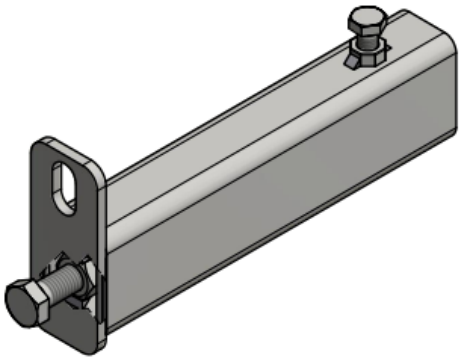

Pos.	Part no.	Article no.	Qty.	Title.	Description.	Material.	Mass/pcs.
6	4800355	4800355	1	Skrue, sekskant M10x25 8.8 FZB ISO4017	Sekskantskrue med fuld gevind	8.8	0.03 kg
5	303368	303368	1	Bolt M14x40 FZB ISO4017	Sekskantskrue med fuld gevind	8.8	0.07 kg
4	303367	303367	1	Møtrik M 14 sort DIN 934-8		8.8	0.03 kg
3	4800356	4800356	1	Møtrik, M10 8.8 rå ISO4032		8	0.01 kg
2	20170749		1	Profil for bærearm	Plate 60 X 40, T=240	S235JR	1.31 kg
1	20170748		1	Endeplade for bærearm	Plate 110 X 45, T=6	S235JR	0.2 kg

All dimension in mm, angle in deg, measures without tolerances ISO 2768-1 c

Designed by	Checked by	Creation date	Projection:	Scale:	Size:	Weight:	Surface:
JP		30-03-2017	First angle	1 : 2	A3	1,65 kg	Varmgalvaniseret

This drawing may not be copied or disclosed to third part without the consent of Bevola A/S

BEVOLA

Hugines vej 22, DK 4100 Ringsted, Phone +45 5766 8000, CVR.33576018, www.bevola.com

© Bevola A/S. All rights reserved. 2017

Title: Konsol for bærearm universal

Subject:

Article no.: 386157

Customer:

Sheet 1 / 1

Drawing no.: 20170750

Revision C

C:_vaf\Bevola\Bevola Norge\Sidehinder koncept\20170750.iam

BEVOLA

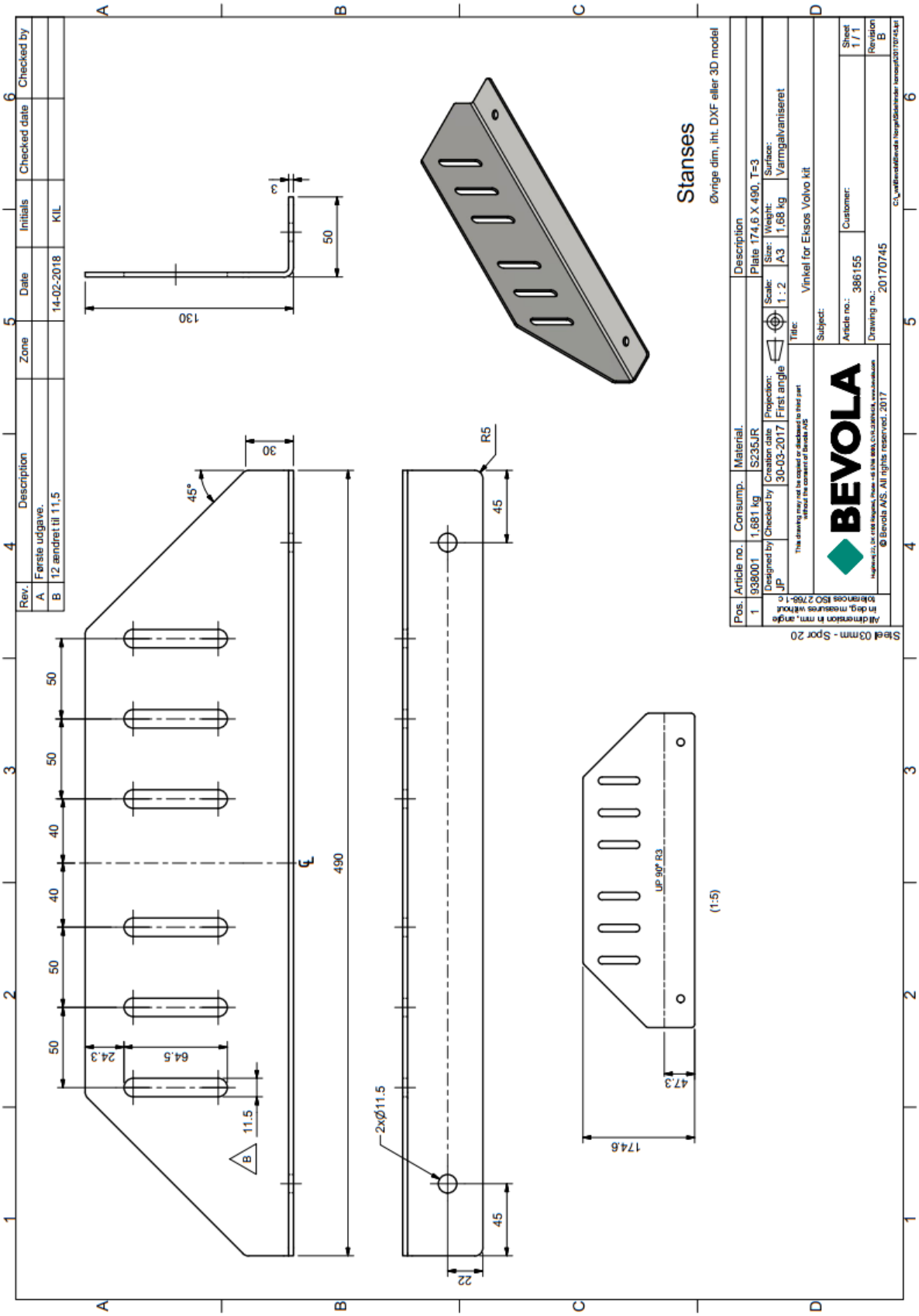
Stanses
Øvrige dim. iht. DXF eller 3D model
Rev. | Description | Zone | Date | Initials | Checked date | Checked by
A | Første udgave. | | | | | |
B | 12 ændret til 11,5 | | 14-02-2018 | KIL | | |
Pos. | Article no. | Consump. | Material | Description
1 | 938001 | 1,681 kg | S235JR | Plate 174.6 X 490, T=3
Designed by: JP
Checked by
Creation date: 30-03-2017
Projection: First angle
Scale: 1 : 2
Size: A3
Weight: 1,68 kg
Surface: Varmgalvaniseret
Title: Vinkel for Eksos Volvo kit
Subject:
Article no.: 386155
Customer:
Drawing no.: 20170745
Sheet 1 / 1
Revision B
BEVOLA
© Bevola A/S. All rights reserved. 2017
Steel 03mm - Spor 20
All dimension in mm, angle in deg, measures without tolerances ISO 2768-1 c
130
50
3
30
45°
490
50
50
40
40
50
50
24.3
64.5
11.5
B
R5
45
45
22
2xØ11.5
UP 90° R3
47.3
174.6
(1:5)

Rev.	Description	Zone	Date	Initials	Checked date	Checked by
A	Første udgave.					
B	Overflade ændret til varmgalv.		18-01-2019	JP		

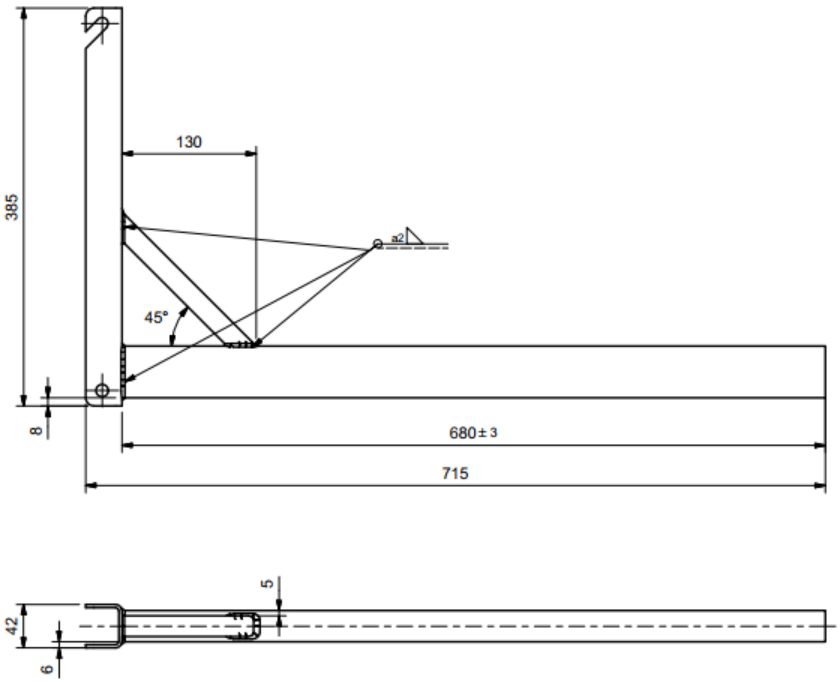

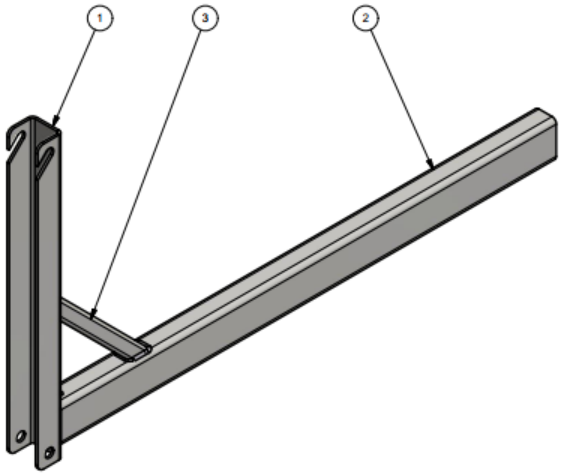

Pos.	Part no.	Article no.	Qty.	Title.	Description.	Material.	Mass/pcs.
3	20170766		1	Støtteprofil for bærearm	Plate 20 X 20, T=183.8	S235JR	0.17 kg
2	20170764		1	Profil for bærearm	dim 30 x 50 x 680	S235JR	2.25 kg
1	20170692		1	Profil for Sideværnsbeslag	Plate 101,2 X 385, T=3	S235JR	0.91 kg

All dimension in mm, angle in deg, measures without tolerances ISO 2768 - c

Designed by	Checked by	Creation date	Projection:	Scale:	Size:	Weight:	Surface:
JP		04-04-2017	First angle	1 : 4	A3	3,34 kg	Varmgalvaniseret

This drawing may not be copied or disclosed to third part without the consent of Bevola A/S

BEVOLA

Hugbølvej 22, DK 4100 Ringsted, Phone +45 5768 8000, CVR.33676128, www.bevola.com

© Bevola A/S. All rights reserved. 2017

Title: Bærearm for sideværn 720x385mm

Subject:

Article no.: 386153

Customer:

Sheet 1 / 1

Drawing no.: 20170765

Revision B

C:_ws\Bevola\Bevola Norge\Sidehinder konceptf\20170765.iam

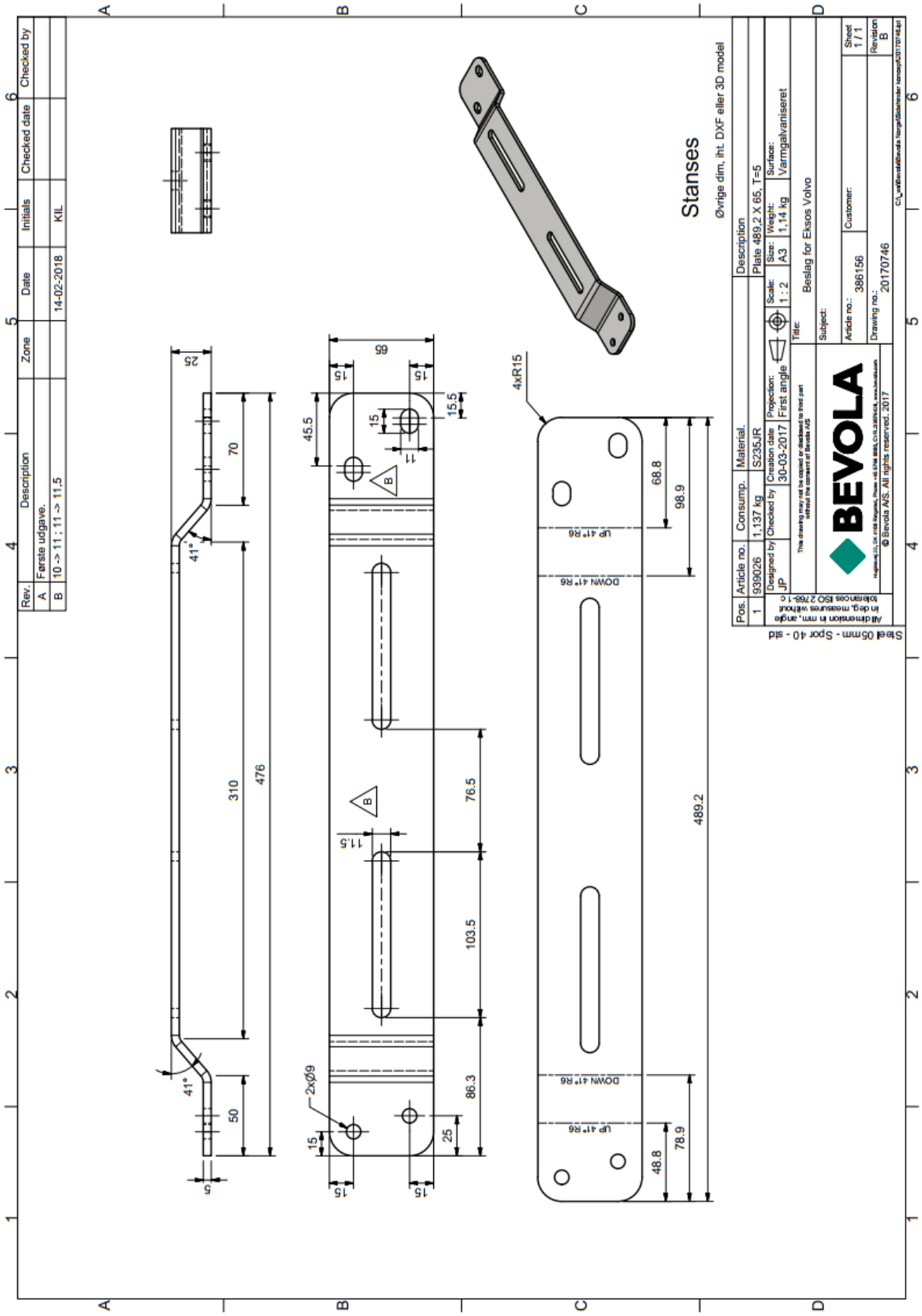
Stanses
Øvrige dim. iht. DXF eller 3D model
Rev. | Description | Zone | Date | Initials | Checked date | Checked by
A | Første udgave. | | | | |
B | 10 -> 11 : 11 -> 11.5 | | 14-02-2018 | KIL | |
Pos. | Article no. | Consump. | Material | Description
1 | 939026 | 1.137 kg | S235JR | Plate 489.2 X 65, T=5
Designed by JP | Checked by | Creation date 30-03-2017 | Projection: First angle | Scale: 1 : 2 | Size: A3 | Weight: 1.14 kg | Surface: Varmgalvaniseret
Title: Beslag for Eksos Volvo
Subject:
Article no.: 386156
Customer:
Drawing no.: 20170746
Sheet 1 / 1
Revision B
Steel 05mm - Spor 40 - std
All dimension in mm, angle in deg, measures without tolerances ISO 2768-1 c
BEVOLA
© Bevola A/S. All rights reserved. 2017
4xR15
2xØ9
UP 41° R6
DOWN 41° R6
489.2
476
310
70
65
45.5
76.5
103.5
86.3
98.9
68.8
78.9
48.8

Rev.	Description	Zone	Date	Initials	Checked date	Checked by
A	Første udgave.					
B	Overflade ændret til varmgalv.		18-01-2019	JP		

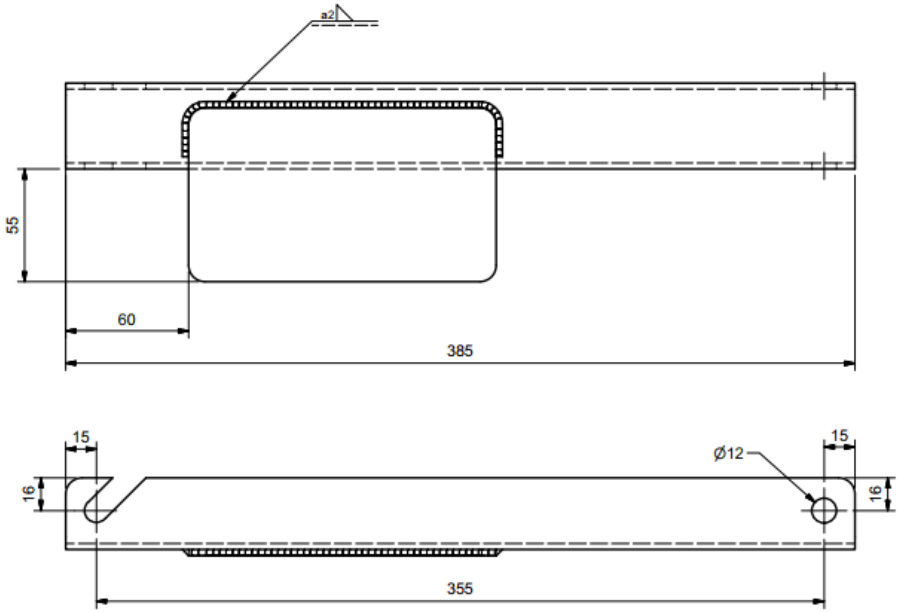

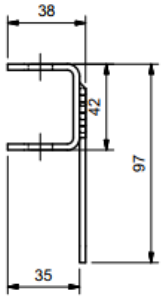

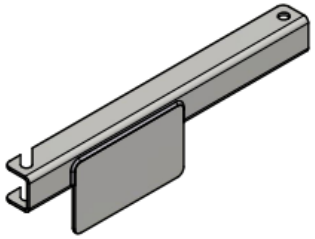

Pos.	Part no.	Article no.	Qty.	Title.	Description.	Material.	Mass/pcs.
2	20170743		1	Plade for sidevæmsbeslag	Plate 150 X 85, T=3	S235JR	0.3 kg
1	20170692		1	Profil for Sidevæmsbeslag	Plate 101,2 X 385, T=3	S235JR	0.91 kg

Designed by	Checked by	Creation date	Projection:	Scale:	Size:	Weight:	Surface:
JP		29-03-2017	First angle	1 : 2	A3	1,21 kg	Varmgalvaniseret

All dimension in mm, angle in deg, measures without tolerances ISO 2768-1 c

This drawing may not be copied or disclosed to third part without the consent of Bevola A/S

BEVOLA

Hugbrevej 22, DK 4100 Ringsted, Phone +45 5768 8000, CVR.23676416, www.bevola.com

© Bevola A/S. All rights reserved. 2017

Title: Beslag f. sideværn m. plade

Subject:

Article no.: 386154

Customer:

Sheet 1 / 1

Drawing no.: 20170744

Revision B

C:_wsl\Bevola\Bevola Norge\Sidehinder koncept\20170744.iam

BEVOLA

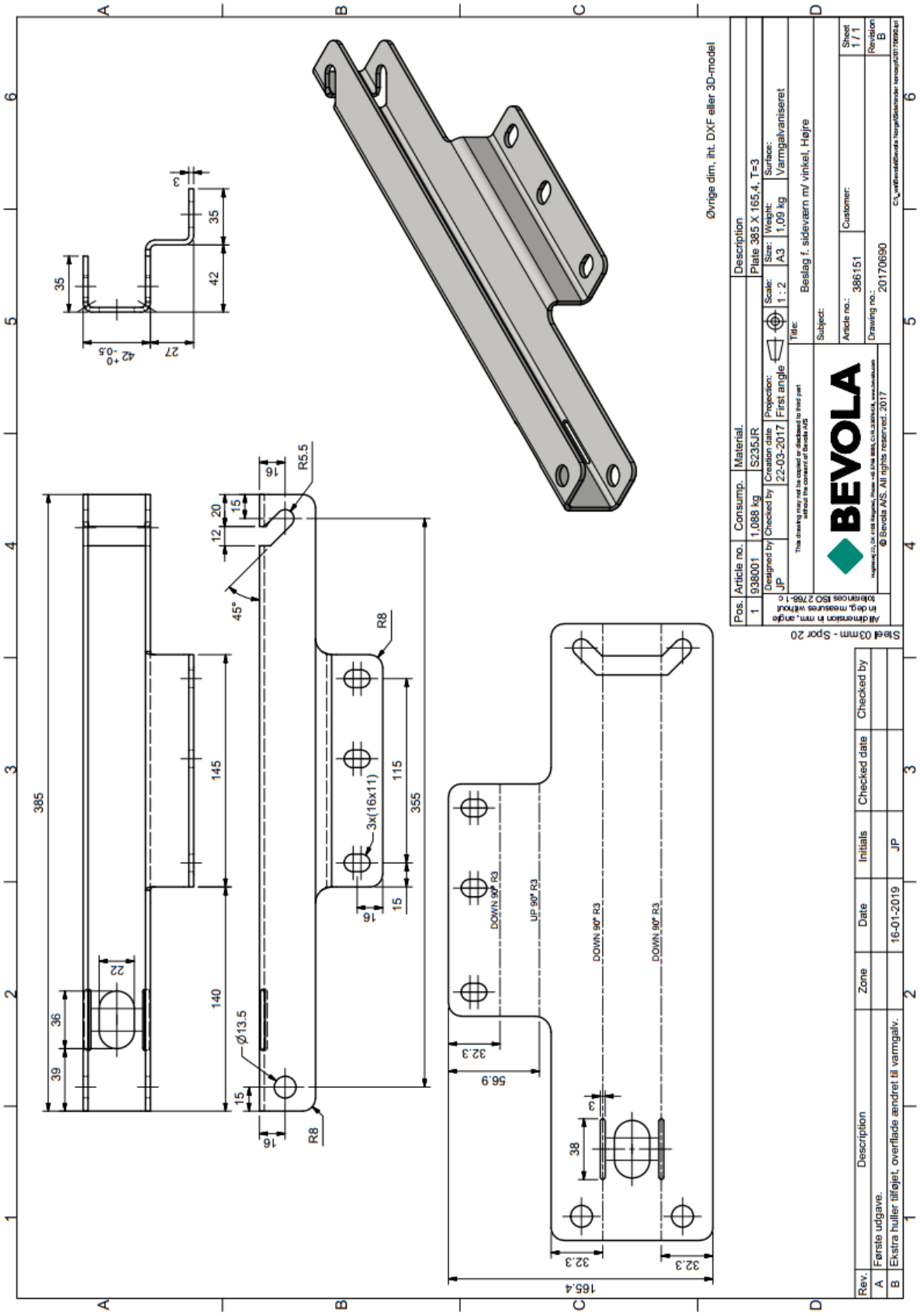
Øvrige dim. iht. DXF eller 3D-model
Pos. | Article no. | Consump. | Material. | Description
1 | 938001 | 1,088 kg | S235JR | Plate 385 X 165.4, T=3
Designed by: JP | Checked by | Creation date: 22-03-2017 | Projection: First angle | Scale: 1 : 2 | Size: A3 | Weight: 1,09 kg | Surface: Varmgalvaniseret
Title: Beslag f. sidevæm m/ vinkel, Højre
Subject:
Article no.: 386151
Customer:
Drawing no.: 20170690
Sheet 1 / 1
Revision B
BEVOLA
Steel 03mm - Spor 20
All dimension in mm, angle in deg, measures without tolerances ISO 2768-1 c
DOWN 90° R3
UP 90° R3
R5.5
R8
3x(16x11)
Ø13.5
385
145
140
355
115
165.4
56.9
32.3
38
Rev. | Description | Zone | Date | Initials | Checked date | Checked by
A | Første udgave.
B | Ekstra huller tilføjet, overflade ændret til varmgalv. | | 16-01-2019 | JP

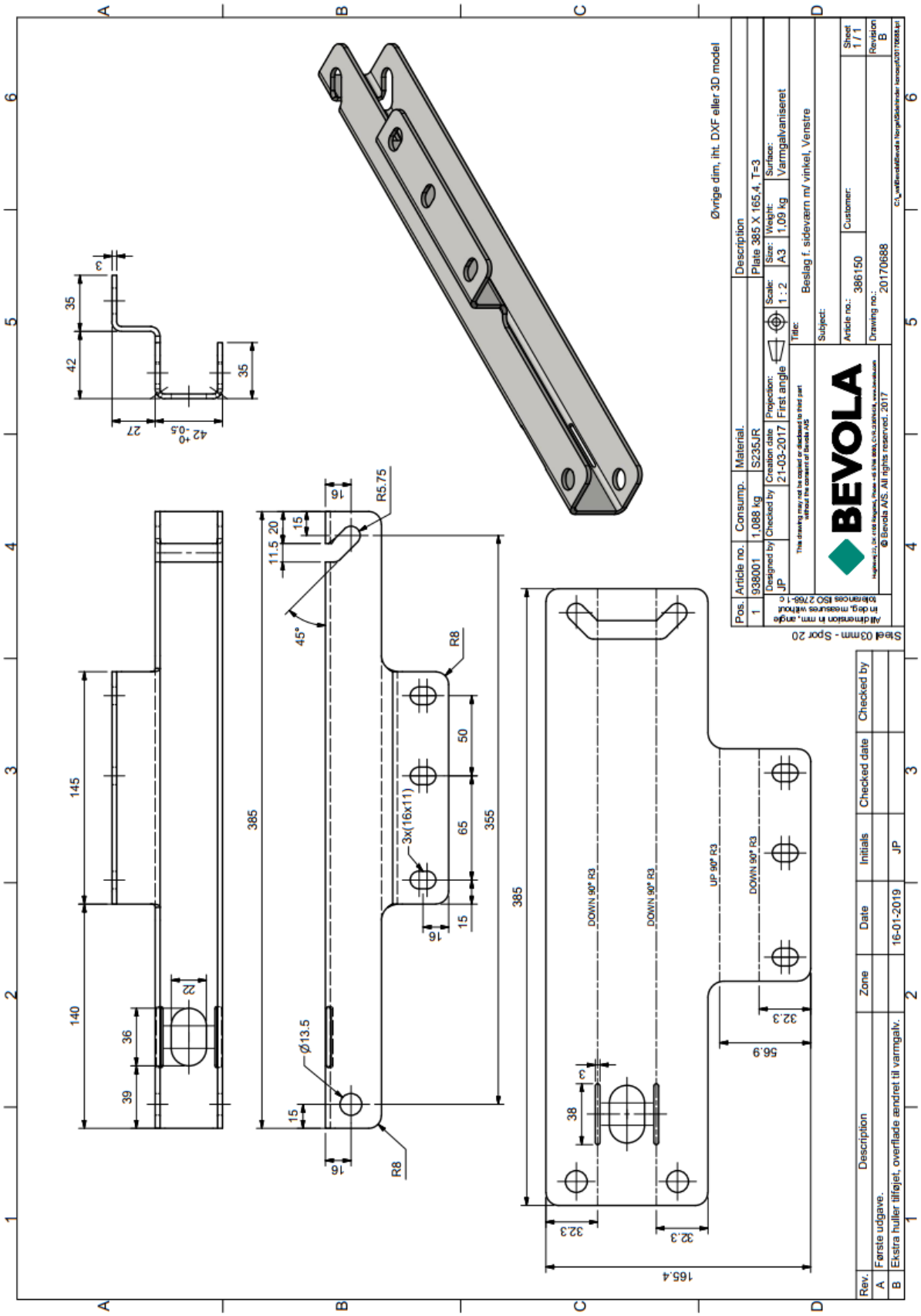
Øvrige dim, iht. DXF eller 3D model
Pos. | Article no. | Consump. | Material. | Description
1 | 938001 | 1.088 kg | S235JR | Plate 385 X 165.4, T=3
Designed by: JP
Checked by
Creation date: 21-03-2017
Projection: First angle
Scale: 1 : 2
Size: A3
Weight: 1.09 kg
Surface: Varmgalvaniseret
Title: Beslag f. sideværn m/ vinkel, Venstre
Subject:
BEVOLA
Article no.: 386150
Customer:
Drawing no.: 20170688
Revision B
Sheet 1 / 1
Stål 03mm - Spor 20
Alle dimensioner i mm, vinkler i deg, measures without tolerances ISO 2768-1 c
© Bevola A/S. All rights reserved. 2017
Rev. | Description | Zone | Date | Initials | Checked date | Checked by
A | Første udgave. | | | | | |
B | Ekstra huller tilføjet, overflade ændret til varmgalv. | | 16-01-2019 | JP | | |
DOWN 90° R3
UP 90° R3
3x(16x11)
Ø13.5
R5.75
R8
45°
165.4
385
355
145
140
42 +0 -0.5
42

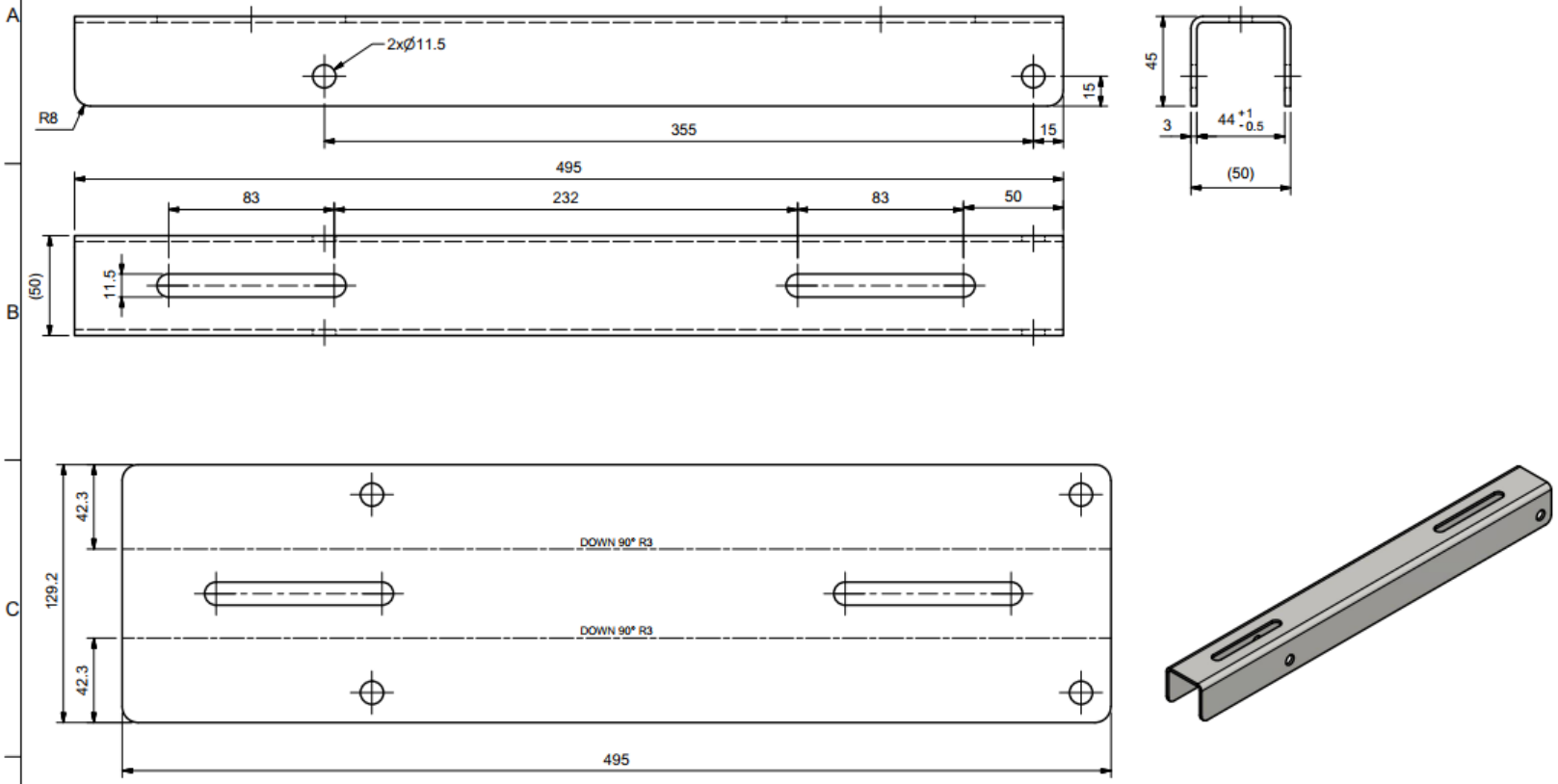

Pos.	Article no.	Consump.	Material.	Description
1	938001	1,458 kg	S235JR	Plate 495 X 128,2, T=3

Designed by	Checked by	Creation date	Projection:	Scale:	Size:	Weight:	Surface:
JP		22-03-2017	First angle	1 : 2	A3	1,46 kg	Varmgalvaniseret

All dimension in mm, angle in deg, measures without tolerances ISO 2768 - 1 c

Steel 03mm - Spor 20

This drawing may not be copied or disclosed to third part without the consent of Bevola A/S

BEVOLA

Title: Ydre beslag for sidevæm

Subject:

Article no.: 386152

Customer:

Sheet 1 / 1

Drawing no.: 20170691

Revision C

© Bevola A/S. All rights reserved. 2017

Rev.	Description	Zone	Date	Initials	Checked date	Checked by
A	Første udgave.					
B	Overflade ændret til Varmgalv.		18-01-2019	JP		
C	Ø13,5 Huller rettet til Ø11,5, bredde rettet til 50mm	A2/A5	20-03-2019	JP		

BEVOLA

APPENDIX 2

TEKNISKE DATA & VEJLEDENDE EGENSKABER

EN-AW	1050	5005	5754	5083	6060	6082
RoHS Kompatibel	JA	JA	JA	JA	JA	JA
DIN	AL99,5	ALMg1	ALMg3	ALMg 4,5Mn	ALMg Si0,5	ALMg Si1,0
MC'S FARVEKODE	HVID	–	GRØN	BRUN	–	GUL
R_M (MPA)	100-140	140-180	190-280	270-385	180-190	295-310
$R_{P0.2}$ (MPA)	65-105	105-115	70-165	125-210	130-180	250-260
A_{50} (%)	2-12	6-20	7-17	11-17	10	8-10
E-MODUL (MPA)	69.000	69.000	70.000	71.000	69.500	70.000
VÆGTFYLDE (G/CM³)	2,70	2,69	2,66	2,66	2,70	2,70
LEDEEVNE (MS/M)	34-36	23-31	23-23	16-19	28-34	24-32
UDV.KOEF. ($K^{-1}10^{-6}$)	23,5	23,6	23,9	24,2	23,4	23,4
KORROSIONS-BESTANDIGHED	★★	★★	★★★	★★★	★★	★★
SPÅNTAGNING	★	★	★★	★★	★	★★
KOLDBUKNING	★★★	★★	★★	★	★	–
SVEJSNING	★★	★★	★★	★★	★★	★★
DEKORATIV ANODISERING	★★	★★★	★★	★	★★★	★★
HÅRD ANODISERING	★★★	★★★	★★★	★★	★★★	★★★
LEVERES SOM	• PLADER • STÆNGER • TRÅD • BÅND	• PLADER	• PLADER • STÆNGER	• PLADER • STÆNGER	• STÆNGER • RØR • PROFILER	• PLADER • STÆNGER • RØR