Kinnegrip.

SAFETY ON THE ROAD

Product Catalog

Locking and safety solutions for transportation of goods

K5 Dropside lock pillar

Dropside lock for heavy vehicles

Ver 2023:2 En

COMPANY

Kinnegrip

Kinnegrip, a Swedish company established in 1966, that develops, manufactures and markets locking and safety solutions for commercial vehicles. We have a long experience in developing and producing user friendy and safe solutions for transportation of goods.

Our head office and production is located in LIDKÖPING, Sweden with local sales offices in Germany and Italy. We have a well-established network of distributors in Europe and Asia. 95% of our business is exported.

Our technical expertise, long experience and flexible production enables us to provide our customers with standardized as well as customized solutions to fit their needs. Our production takes place in-house, using the latest production techniques. All to ensure that our customers receive products of the highest quality standards and performance.

With Kinnegrip as your supplier, you get a commited partner and user friendly and high quality products.

Read more at www.kinnegrip.se

Our solutions

Kinnegrip offers locking and safety solutions in steel and aluminium for commercial vehicles, with the end user in focus.

K **K pillars**
Dropside and pendelum pillar systems for medium and heavy commercial vehicles.

T **T50**
Dropside lock systems for light commercial vehicles.

C **C10 pillars**
Pillars for Curtainsider.

CONTENTS

Company	2
K5 Dropside Lock	4
K5 Product data	**6**
400 mm	6
600 mm	8
800 mm	12
1000 mm	20
1100 mm	24
1200 mm	28
Accessories	**32**
Material	35
Contact	36

KINNEGRIP

K5 Dropside lock

K5 is a locking system for flatbed constructions consisting of dropside locks for medium and heavy commercial vehicles.

K5 is a robust locking system available in different heights and configurations. Designed for dropsides from 400 mm, avalible in ED-coated steel.

The K5 is designed for exterior dropsides. The pillar is mounted on the side rave of the flatbed and can easily be removed. This gives an open and easily accessible load area with focus on good functionality, high level of personal safety and easy handling.

- The pillar is handled from ground level
- Clear load area for loading and unloading
- Quick and easy operation

Functionality

The K5 dropside lock pillar is designed for flatbeds with overlying dropsides.The pillar is secured in a reccessed support mounted on the side rave of the flatbed. To open the dropsides, pull both handles upwards. To release the pillar from the support, push both handles up to the end position, which releases the wedges that are engaged in the support. The pillar can then be folded outwards and removed, providing a completely open load area.

Design and safety

In order to secure safe handling, the pillar is designed to open in two stages. In the first position, push the handles up to release the dropeside. In the second position, release the pillar from its support by pushing both handles up to the end position.

K5 DROPSIDE LOCK PILLAR

Product data

400 mm

PART NO. STEEL	DESCRIPTION	LENGTH	WEIGHT
504301	K5 Front pillar 400 left steel ED	400 mm	4,00 kg
504401	K5 Front pillar 400 right steel ED	400 mm	4,00 kg
504201	K5 Side pillar 400 steel ED	400 mm	8,50 kg
504231	K5 Side pillar 400 Kinnetop steel ED	400 mm	10,00 kg
504501	K5 Rear pillar 400 left 63 mm steel ED	400 mm	4,00 kg
504601	K5 Rear pillar 400 right 63 mm steel ED	400 mm	4,00 kg
504701	K5 Rear pillar 400 BBE left steel ED	400 mm	8,00 kg
504801	K5 Rear pillar 400 BBE right steel ED	400 mm	8,00 kg
504901	K5 Rear pillar 400 BBD left steel ED	400 mm	8,00 kg
504001	K5 Rear pillar 400 BBD right steel ED	400 mm	8,00 kg

All dropside locks are shown in the left version. BBE wide rear single port. BBD wide rear double port. Customization on request.

SIDE PILLAR 400 MM

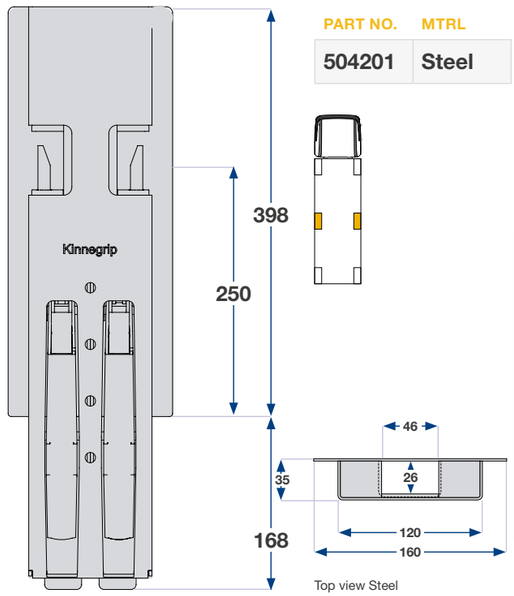

PART NO.	MTRL
504201	Steel

SIDE PILLAR 400 MM KINNETOP

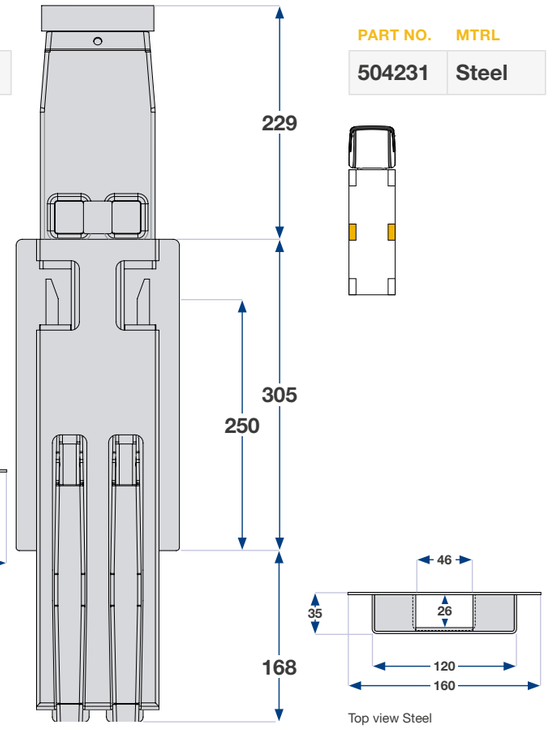

PART NO.	MTRL
504231	Steel

FRONT PILLAR 400 MM

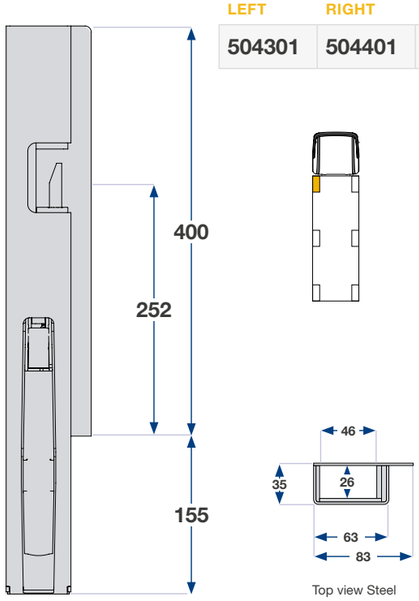

LEFT	RIGHT	MTRL
504301	504401	Steel

REAR PILLAR 400 MM 63 MM

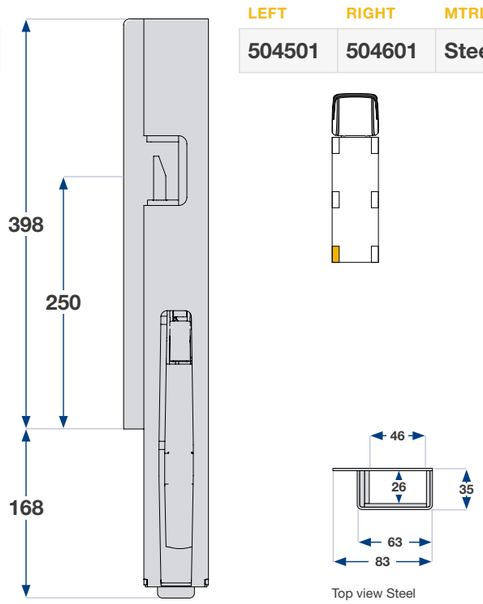

LEFT	RIGHT	MTRL
504501	504601	Steel

REAR PILLAR 400 MM BBE

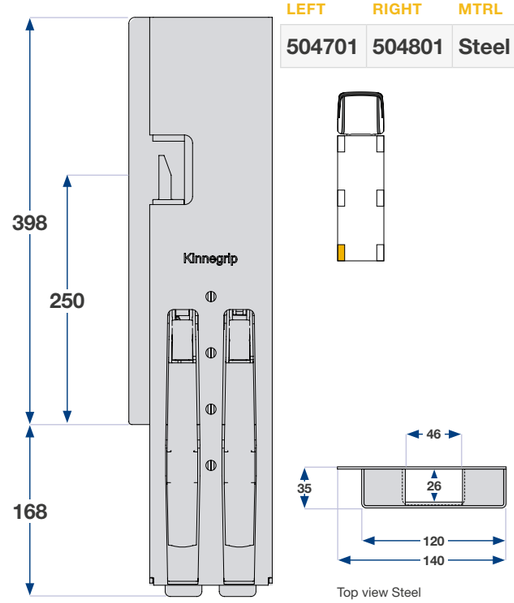

LEFT	RIGHT	MTRL
504701	504801	Steel

REAR PILLAR 400 MM BBD

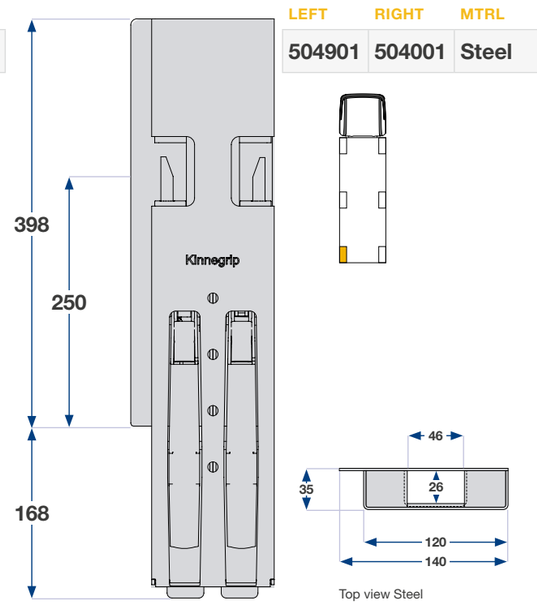

LEFT	RIGHT	MTRL
504901	504001	Steel

600 mm

PART NO. STEEL	DESCRIPTION	LENGTH	WEIGHT
506301	K5 Front pillar 600 left steel ED	600 mm	6,00 kg
506401	K5 Front pillar 600 right steel ED	600 mm	6,00 kg
506201	K5 Side pillar 600 steel ED	600 mm	12,00 kg
506231	K5 Side pillar 600 Kinnetop steel ED	600 mm	13,50 kg
506501	K5 Rear pillar 600 left 63 mm steel ED	600 mm	6,00 kg
506601	K5 Rear pillar 600 right 63 mm steel ED	600 mm	6,00 kg
506701	K5 Rear pillar 600 BBE left steel ED	600 mm	11.50 kg
506801	K5 Rear pillar 600 BBE right steel ED	600 mm	11.50 kg
506901	K5 Rear pillar 600 BBD left steel ED	600 mm	11,50 kg
506001	K5 Rear pillar 600 BBD right steel ED	600 mm	11,50 kg

All dropside locks are shown in the left version. BBE wide rear single port. BBD wide rear double port. Customization on request.

FRONT PILLAR 600 MM

LEFT	RIGHT	MTRL
506301	**506401**	**Steel**

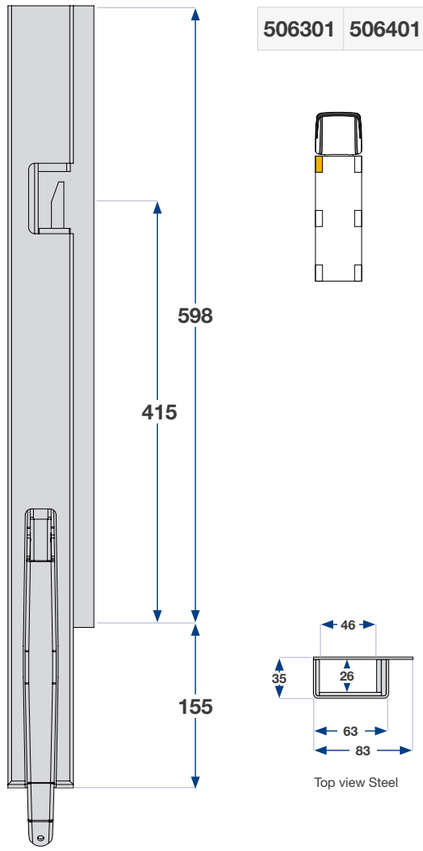

SIDE PILLAR 600 MM

PART NO.	MTRL
506201	**Steel**

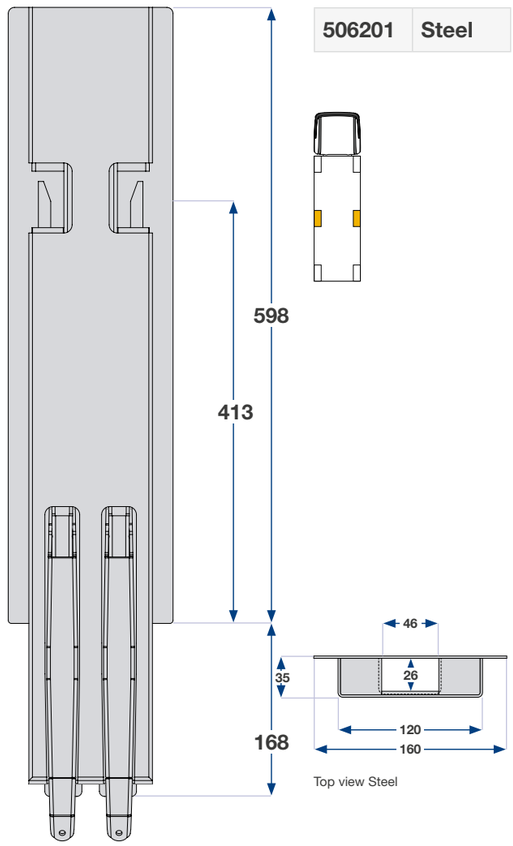

SIDE PILLAR 600 MM KINNETOP

PART NO.	MTRL
506231	Steel

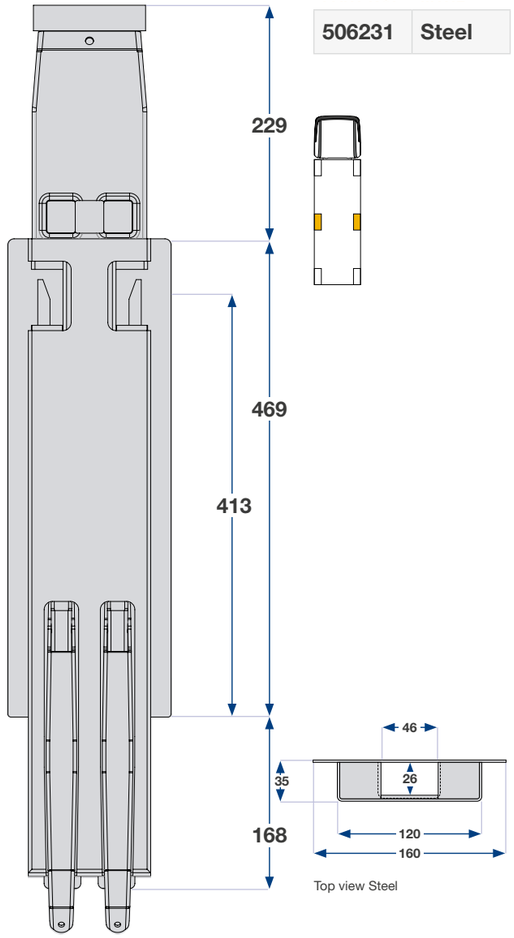

REAR PILLAR 600 MM 63 MM

LEFT	RIGHT	MTRL
506501	506601	Steel

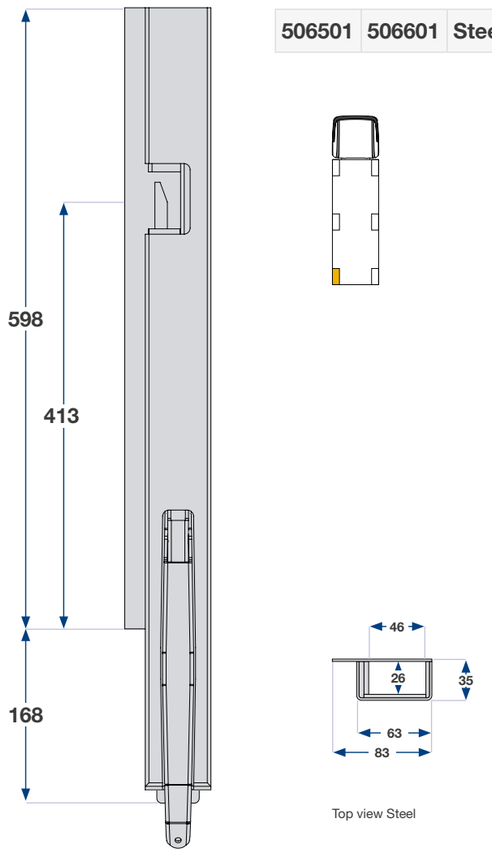

REAR PILLAR 600 MM BBE

LEFT	RIGHT	MTRL
506701	506801	Steel

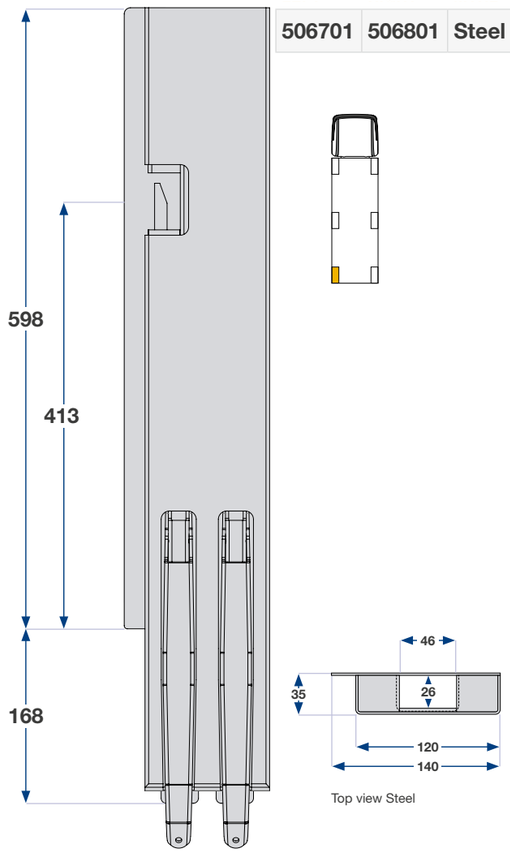

REAR PILLAR 600 MM BBD

LEFT	RIGHT	MTRL
506901	506001	Steel

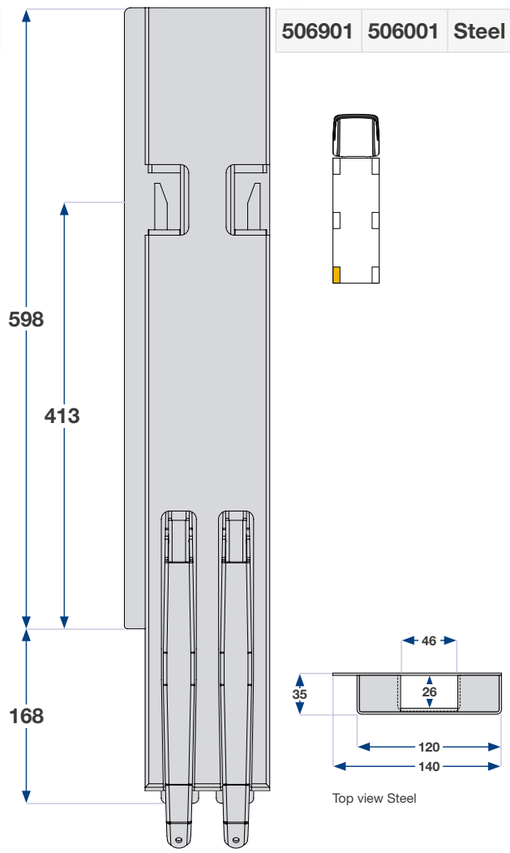

800 mm

PART NO. STEEL	DESCRIPTION	LENGTH	WEIGHT
508301	K5 Front pillar 800 left steel ED	800 mm	7,00 kg
508401	K5 Front pillar 800 right steel ED	800 mm	7,00 kg
508201	K5 Side pillar 800 steel ED	800 mm	13,50 kg
508231	K5 Side pillar 800 Kinnetop steel ED	800 mm	15,00 kg
508501	K5 Rear pillar 800 left 63 mm steel ED	800 mm	7,60 kg
508601	K5 Rear pillar 800 right 63 mm steel ED	800 mm	7,60 kg
508701	K5 Rear pillar 800 BBE left steel ED	800 mm	13,00 kg
508801	K5 Rear pillar 800 BBE right steel ED	800 mm	13,00 kg
508901	K5 Rear pillar 800 BBD left steel ED	800 mm	13,00 kg
508001	K5 Rear pillar 800 BBD right steel ED	800 mm	13,00 kg
508361	K5 Front pillar 800 left 2P steel ED	800 mm	7,00 kg
508461	K5 Front pillar 800 right 2P steel ED	800 mm	7,00 kg
508261	K5 Side pillar 800 2P steel ED	800 mm	13,00 kg
508271	K5 Side pillar 800 Kinnetop 2P steel ED	800 mm	14,50 kg
508561	K5 Rear pillar 800 left 2P 63 mm steel ED	800 mm	7,60 kg
508661	K5 Rear pillar 800 right 2P 63 mm steel ED	800 mm	7,60 kg
508761	K5 Rear pillar 800 BBE left 2P steel ED	800 mm	12,50 kg
508861	K5 Rear pillar 800 BBE right 2P steel ED	800 mm	12,50 kg
508961	K5 Rear pillar 800 BBD left 2P steel ED	800 mm	12,50 kg
508061	K5 Rear pillar 800 BBD right 2P steel ED	800 mm	12,50 kg

All dropside locks are shown in the left version. BBE wide rear single port. BBD wide rear double port. Customization on request.

FRONT PILLAR 800 MM

LEFT	RIGHT	MTRL
508301	508401	Steel

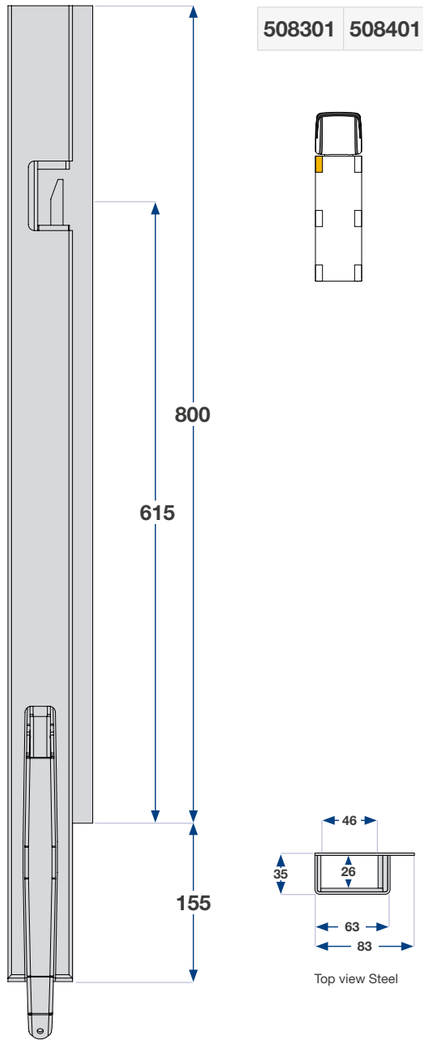

SIDE PILLAR 800 MM

PART NO.	MTRL
508201	Steel

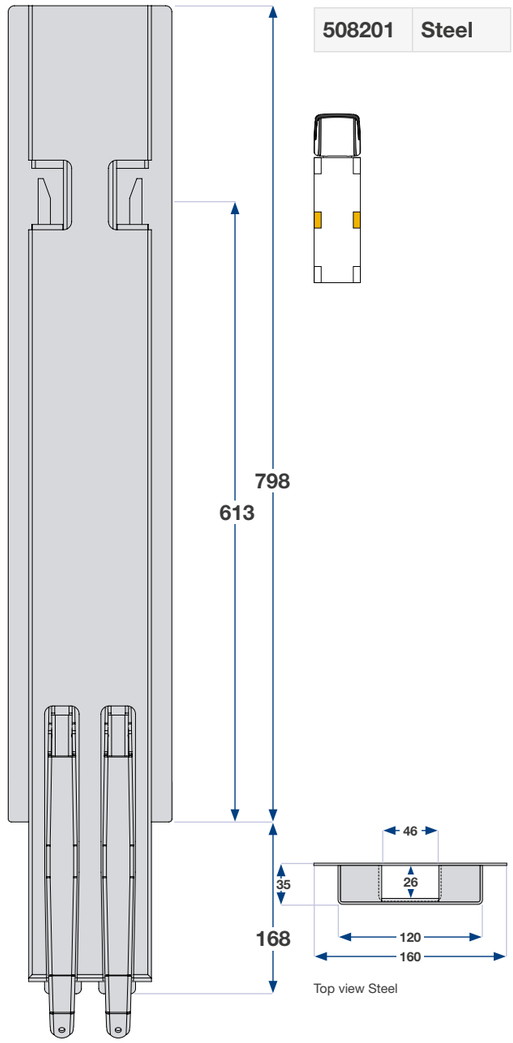

SIDE PILLAR 800 MM KINNETOP

PART NO.	MTRL
508231	Steel

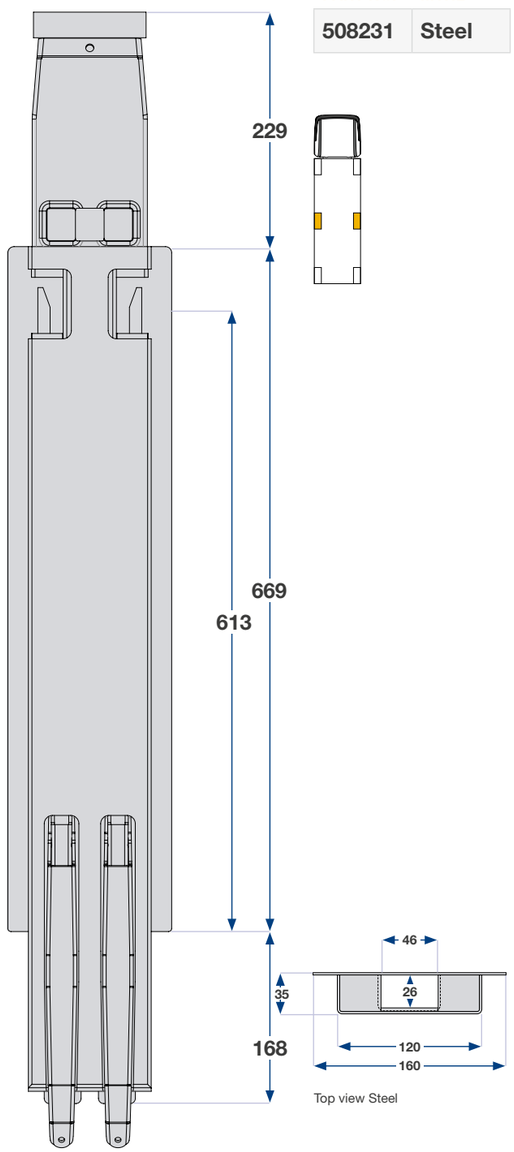

REAR PILLAR 800 MM 63 MM

LEFT	RIGHT	MTRL
508501	508601	Steel

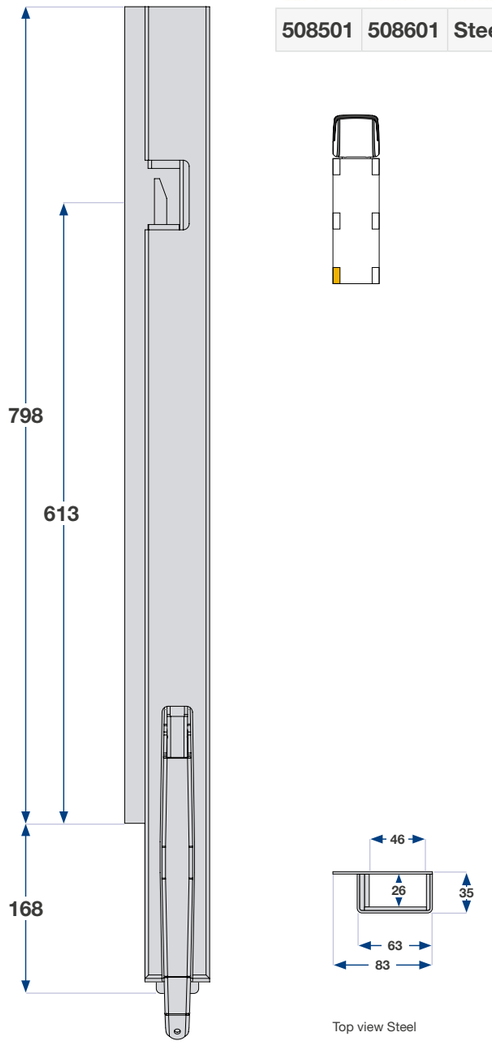

REAR PILLAR 800 MM BBE

LEFT	RIGHT	MTRL
508701	508801	Steel

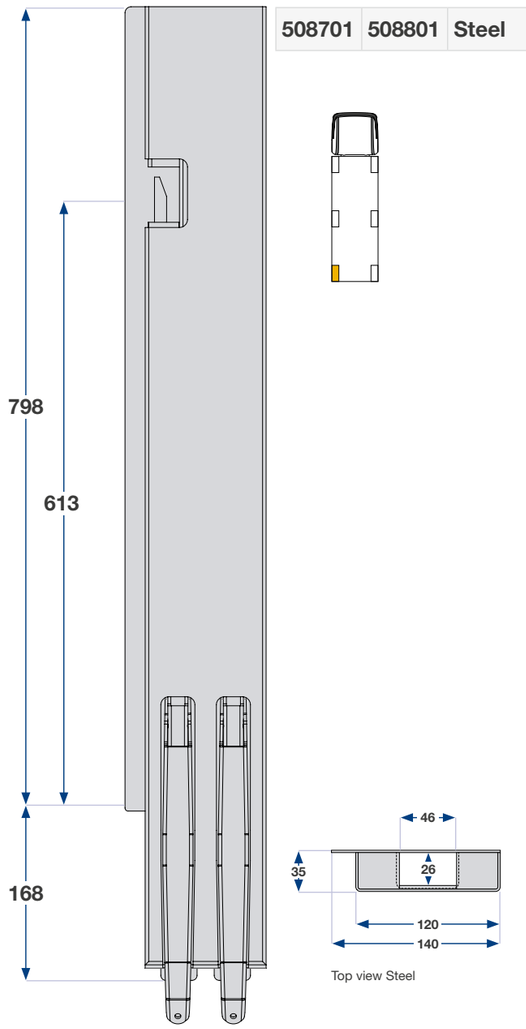

REAR PILLAR 800 MM BBD

LEFT	RIGHT	MTRL
508901	508001	Steel

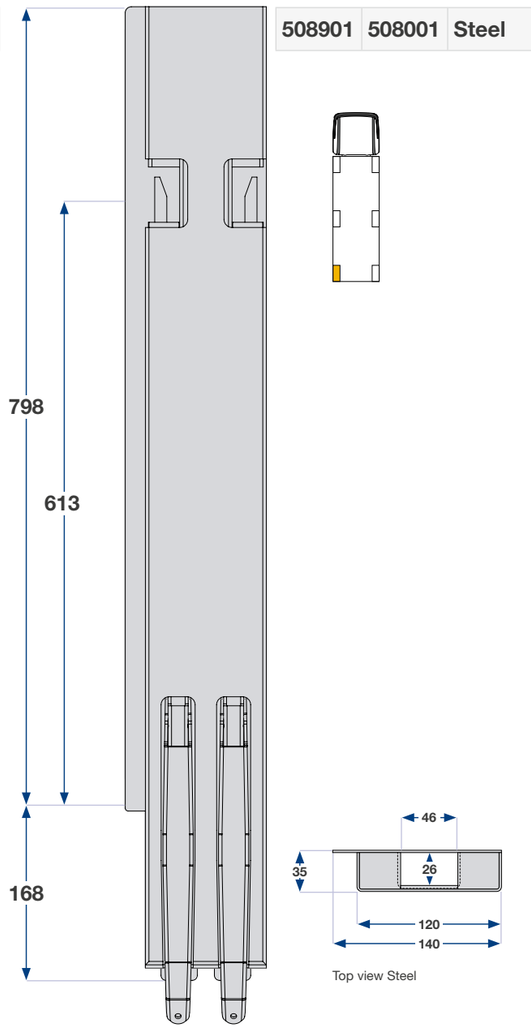

FRONT PILLAR 800 MM 2P

LEFT	RIGHT	MTRL
508361	508461	Steel

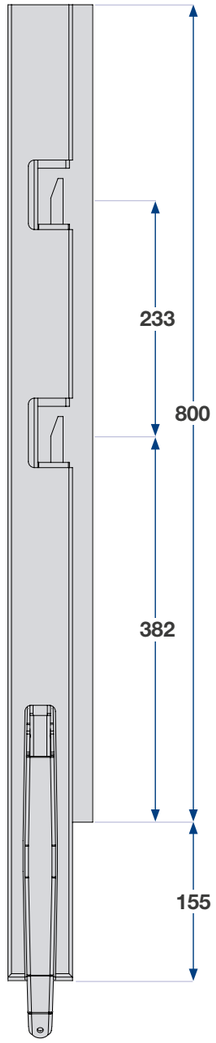

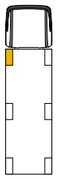

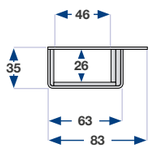

Top view Steel

SIDE PILLAR 800 MM 2P

PART NO.	MTRL
508261	Steel

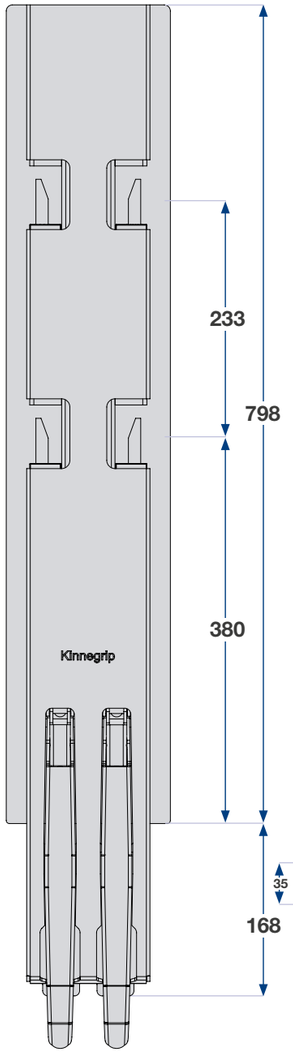

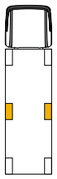

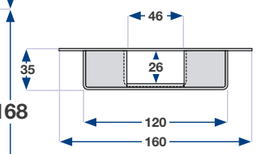

Top view Steel

SIDE PILLAR 800 MM KINNETOP 2P

PART NO.	MTRL
508271	Steel

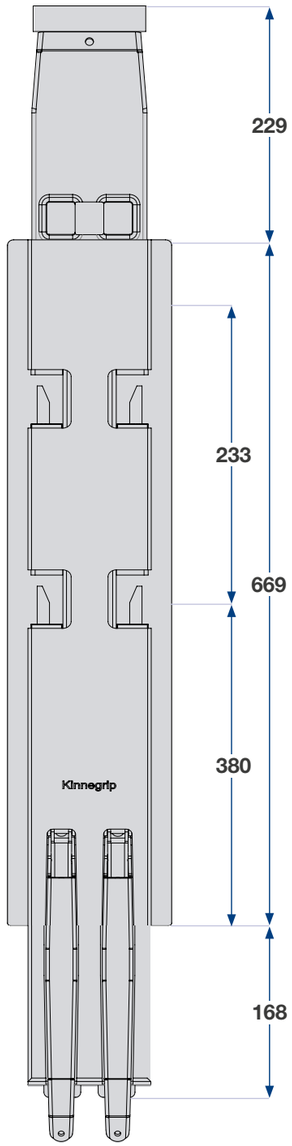

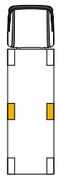

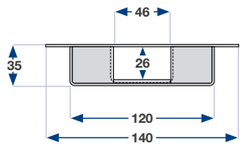

Top view Steel

SIDE PILLAR 800 MM KINNETOP 2P

LEFT	RIGHT	MTRL
508561	508661	Steel

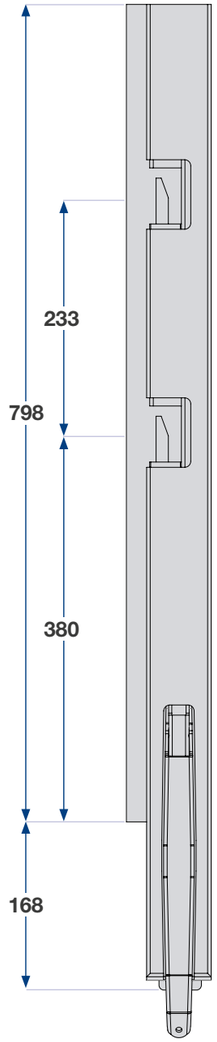

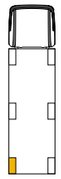

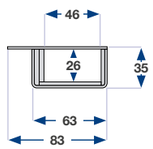

Top view Steel

REAR PILLAR 800 MM 2P BBE

LEFT	RIGHT	MTRL
508761	508861	Steel

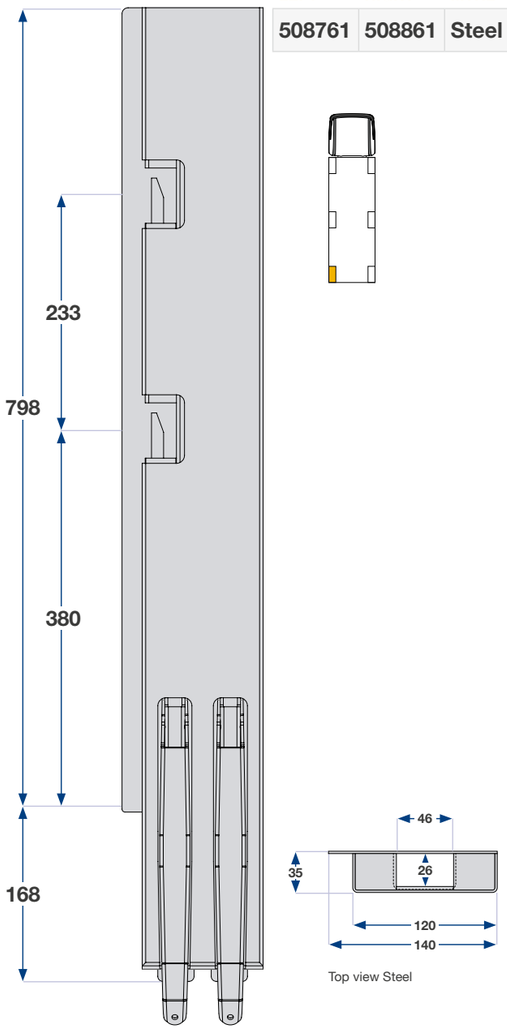

Top view Steel

REAR PILLAR 800 MM 2P BBD

LEFT	RIGHT	MTRL
508961	508061	Steel

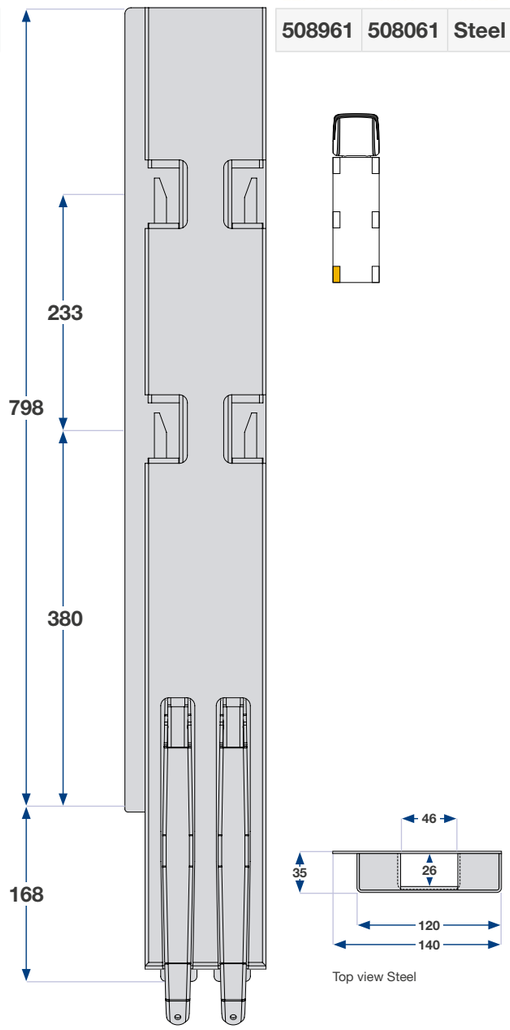

Top view Steel

1000 mm

PART NO. STEEL	DESCRIPTION	LENGTH	WEIGHT
510301	K5 Front pillar 1000 left steel ED	1000 mm	8,60 kg
510401	K5 Front pillar 1000 right steel ED	1000 mm	8,60 kg
510201	K5 Side pillar 1000 steel ED	1000 mm	15,50 kg
510231	K5 Side pillar 1000 Kinnetop steel ED	1000 mm	17,00 kg
510501	K5 Rear pillar 1000 left 63 mm steel ED	1000 mm	8,00 kg
510601	K5 Rear pillar 1000 right 63 mm steel ED	1000 mm	8,00 kg
510701	K5 Rear pillar 1000 BBE left steel ED	1000 mm	15,00 kg
510801	K5 Rear pillar 1000 BBE right steel ED	1000 mm	15,00 kg
510901	K5 Rear pillar 1000 BBD left steel ED	1000 mm	15,00 kg
510001	K5 Rear pillar 1000 BBD right steel ED	1000 mm	15,00 kg

All dropside locks are shown in the left version. BBE wide rear single port. BBD wide rear double port. Customization on request.

FRONT PILLAR 1000 MM

LEFT	RIGHT	MTRL
510301	510401	Steel

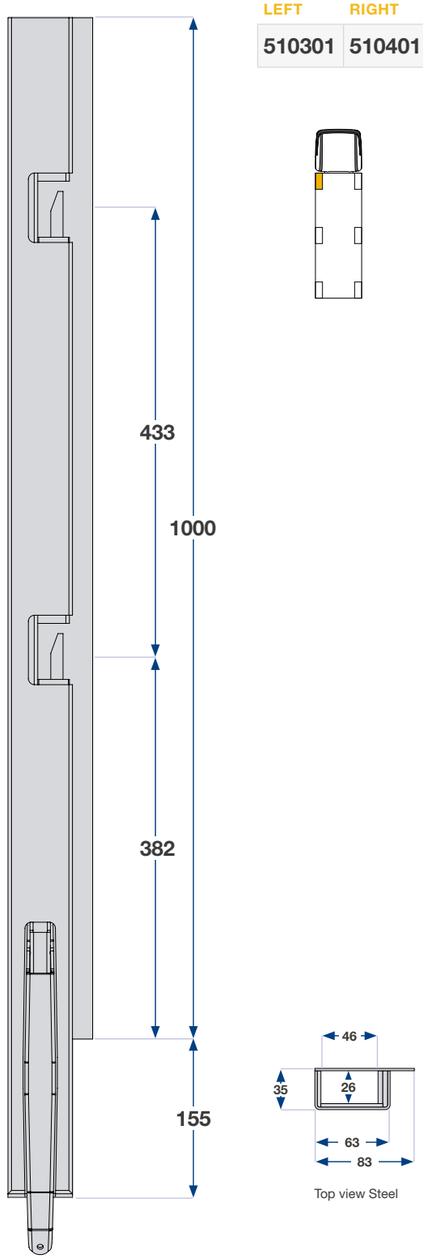

SIDE PILLAR 1000 MM

PART NO.	MTRL
510201	Steel

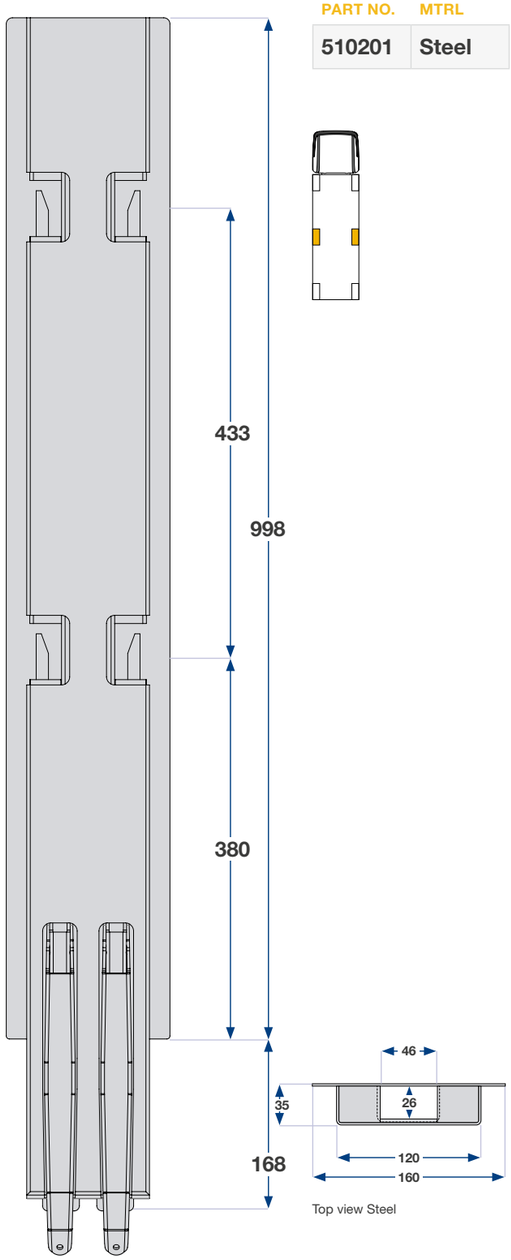

SIDE PILLAR 1000 MM KINNETOP

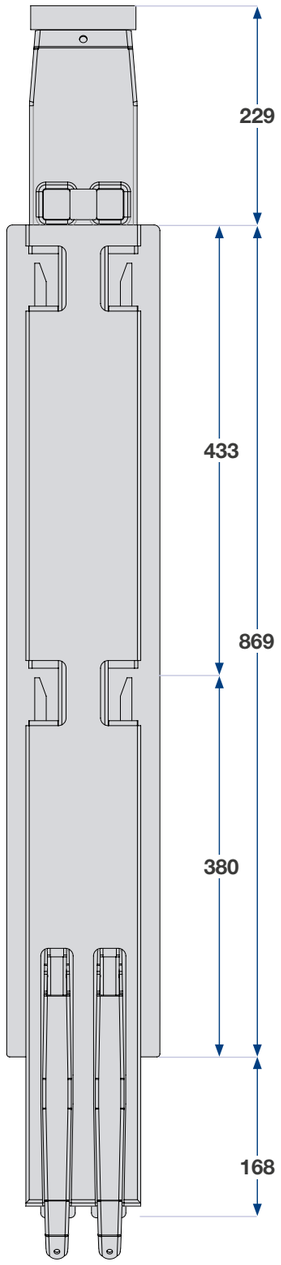

PART NO.	MTRL
510231	Steel

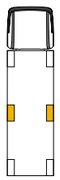

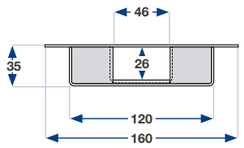

Top view Steel

REAR PILLAR 1000 MM 63 MM

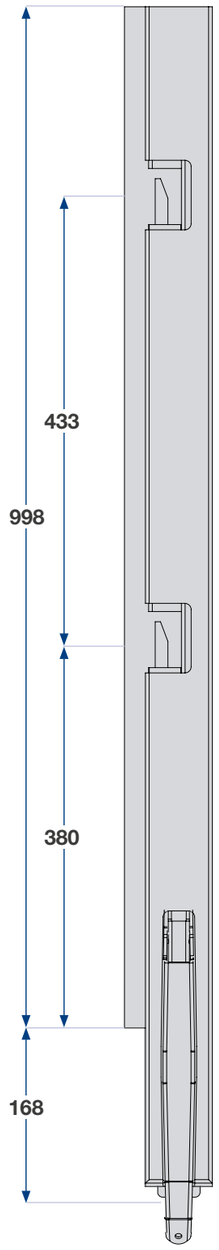

LEFT	RIGHT	MTRL
510501	510601	Steel

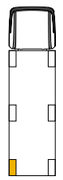

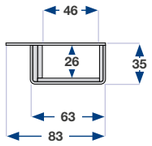

Top view Steel

REAR PILLAR 1000 MM BBE

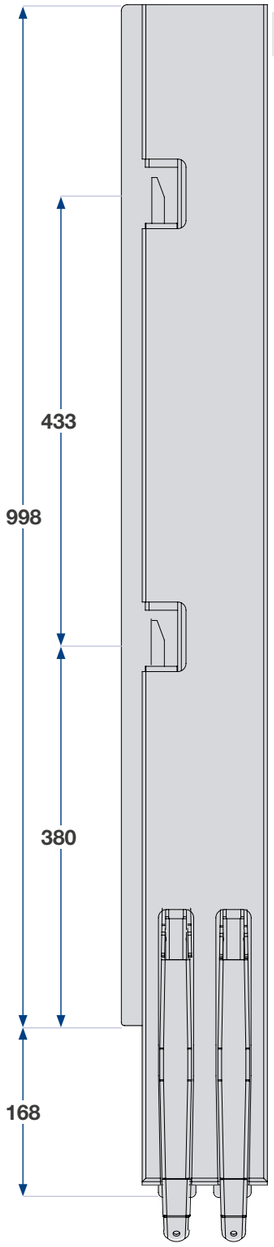

LEFT	RIGHT	MTRL
510701	510801	Steel

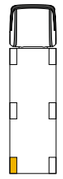

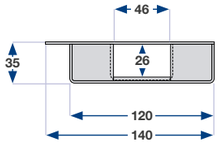

Top view Steel

REAR PILLAR 1000 MM BBD

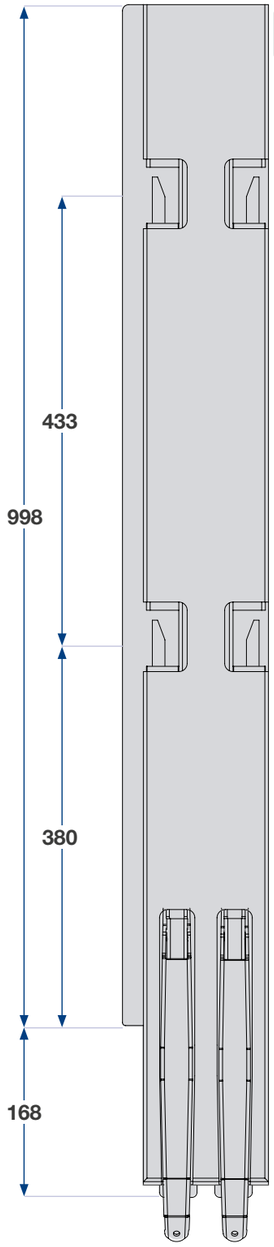

LEFT	RIGHT	MTRL
510901	510001	Steel

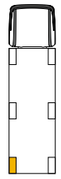

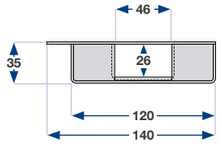

Top view Steel

1100 mm

PART NO. STEEL	DESCRIPTION	LENGTH	WEIGHT
511301	K5 Front pillar 1100 left steel ED	1100 mm	9,00 kg
511401	K5 Front pillar 1100 right steel ED	1100 mm	9,00 kg
511201	K5 Side pillar 1100 steel ED	1100 mm	18,50 kg
511501	K5 Rear pillar 1100 left 63 mm steel ED	1100 mm	8,5 0 kg
511601	K5 Rear pillar 1100 right 63 mm steel ED	1100 mm	8,50 kg
511701	K5 Rear pillar 1100 BBE left steel ED	1100 mm	18,00 kg
511801	K5 Rear pillar 1100 BBE right steel ED	1100 mm	18,00 kg
511901	K5 Rear pillar 1100 BBD left steel ED	1100 mm	18,00 kg
511001	K5 Rear pillar 1100 BBD right steel ED	1100 mm	18,00 kg

All dropside locks are shown in the left version. BBE wide rear single port. BBD wide rear double port. Customization on request.

FRONT PILLAR 1100 MM

LEFT	RIGHT	MTRL
511301	511401	Steel

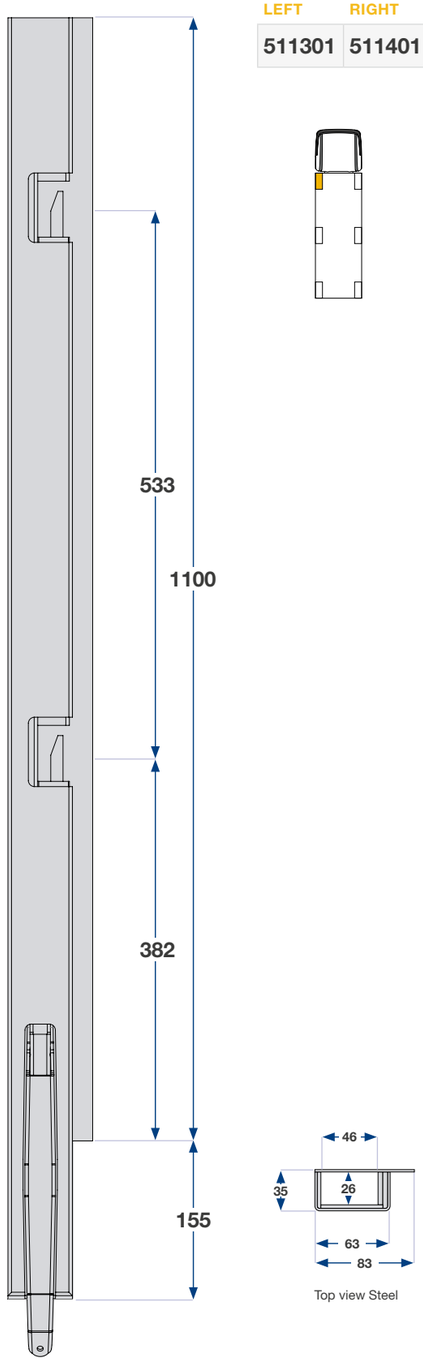

SIDE PILLAR 1100 MM

PART NO.	MTRL
511201	Steel

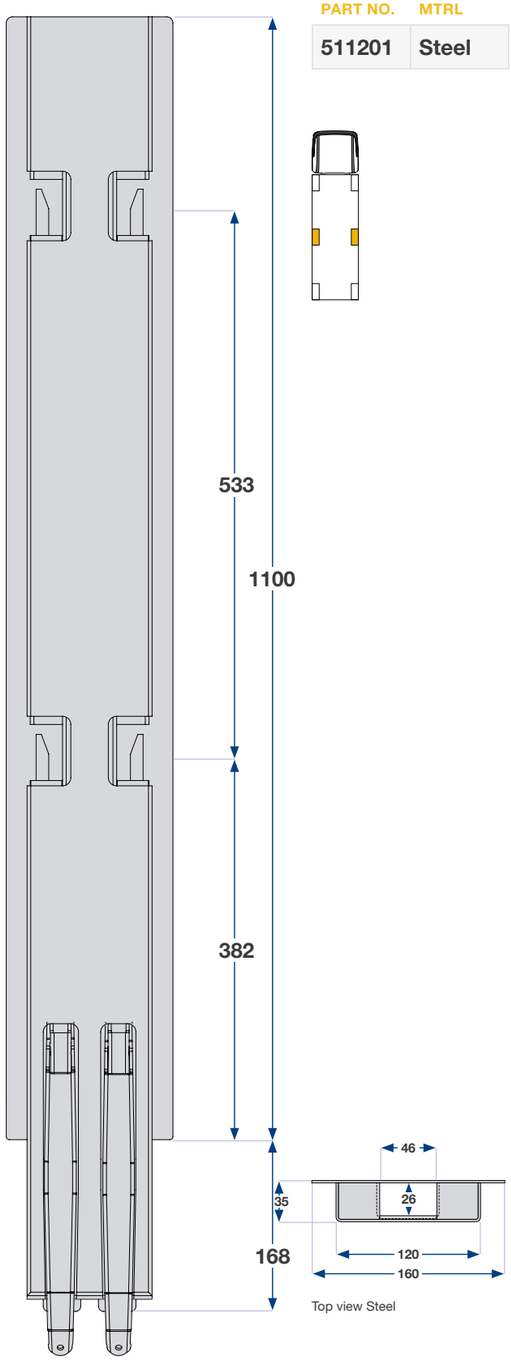

REAR PILLAR 1100 MM 63 MM

LEFT	RIGHT	MTRL
511501	511601	Steel

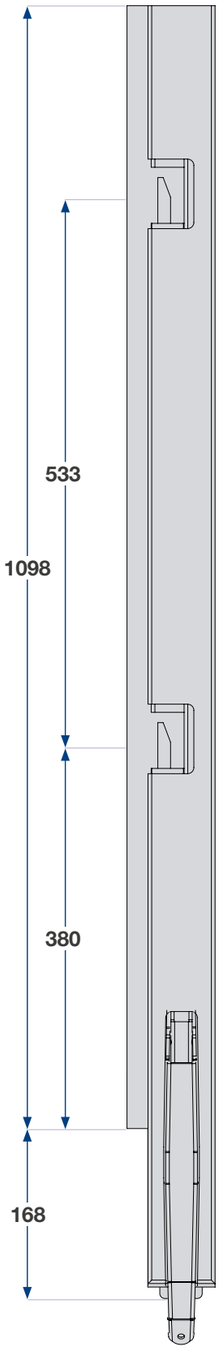

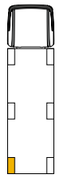

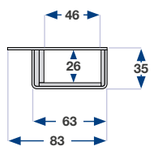

Top view Steel

REAR PILLAR 1100 MM BBE

LEFT	RIGHT	MTRL
511701	511801	Steel

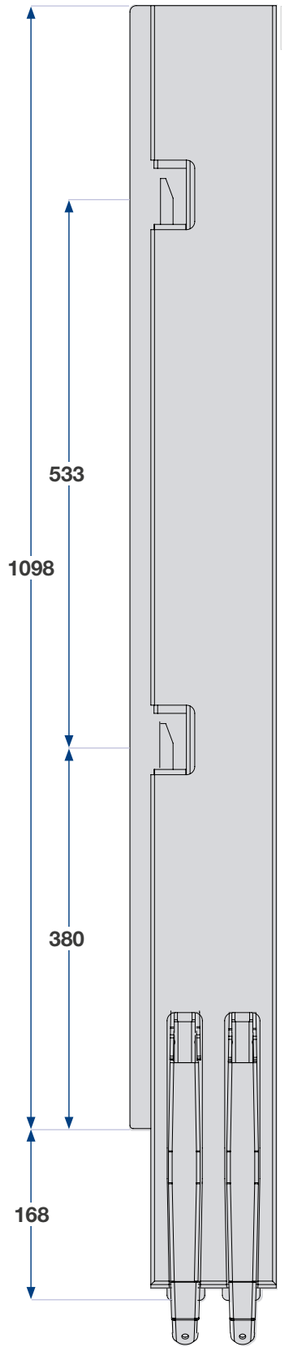

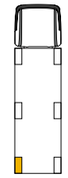

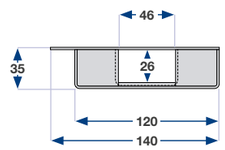

Top view Steel

REAR PILLAR 1100 MM BBD

LEFT	RIGHT	MTRL
511901	511001	Steel

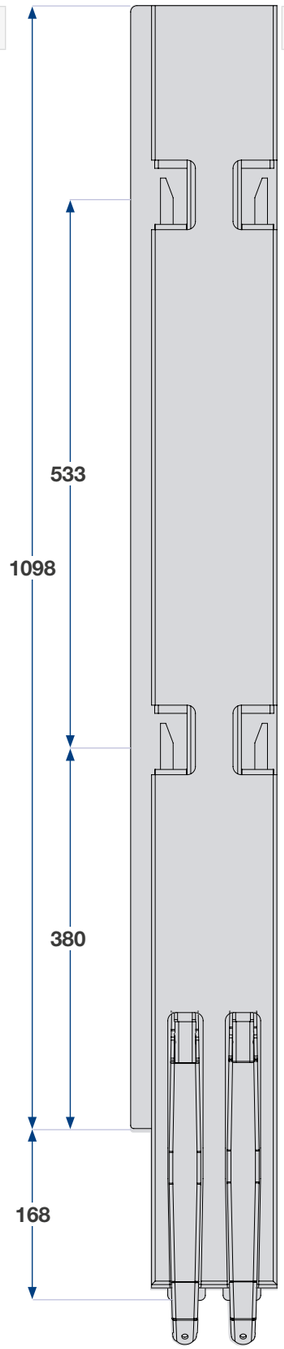

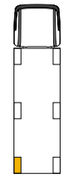

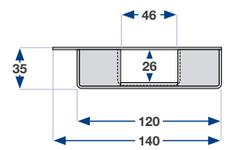

Top view Steel

1200 mm

PART NO. STEEL	DESCRIPTION	LENGTH	WEIGHT
512301	K5 Front pillar 1200 left steel ED	1200 mm	10,00 kg
512401	K5 Front pillar 1200 right steel ED	1200 mm	10,00 kg
512201	K5 Side pillar 1200 steel ED	1200 mm	19,00 kg
512501	K5 Rear pillar 1200 left 63 mm steel ED	1200 mm	9,00 kg
512601	K5 Rear pillar 1200 right 63 mm steel ED	1200 mm	9,00 kg
512701	K5 Rear pillar 1200 BBE left steel ED	1200 mm	18,50 kg
512801	K5 Rear pillar 1200 BBE right steel ED	1200 mm	18,50 kg
512901	K5 Rear pillar 1200 BBD left steel ED	1200 mm	18,50 kg
512001	K5 Rear pillar 1200 BBD right steel ED	1200 mm	18,50 kg

All dropside locks are shown in the left version. BBE wide rear single port. BBD wide rear double port. Customization on request.

FRONT PILLAR 1200 MM

LEFT	RIGHT	MTRL
512301	512401	Steel

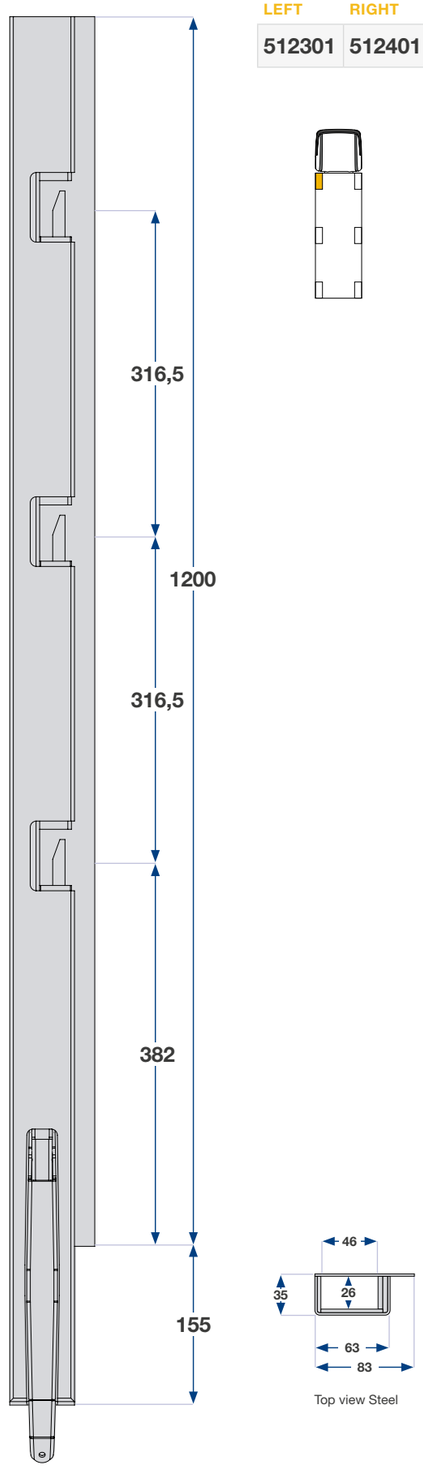

SIDE PILLAR 1200 MM

PART NO.	MTRL
512201	Steel

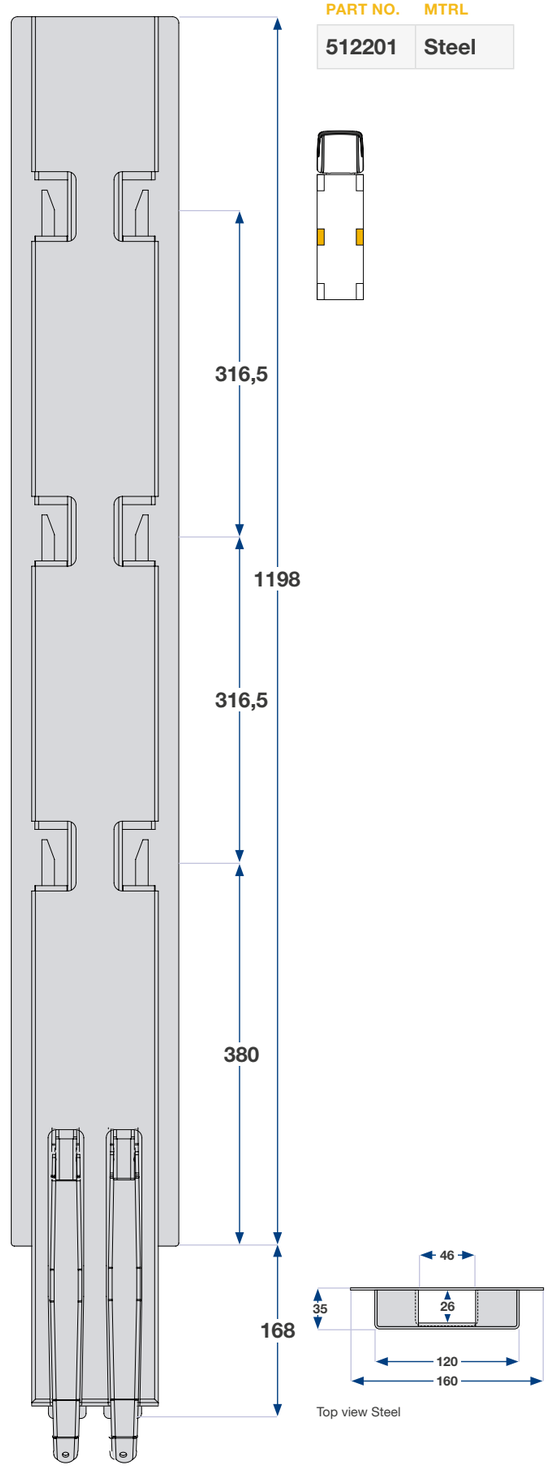

REAR PILLAR 1200 MM 63 MM

LEFT	RIGHT	MTRL
512501	512601	Steel

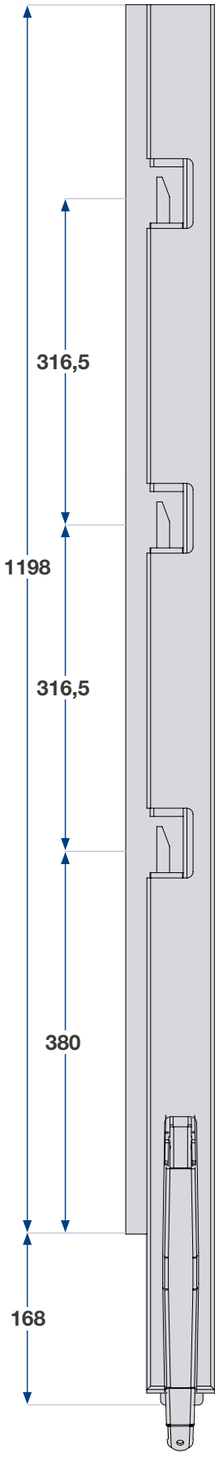

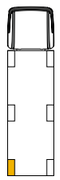

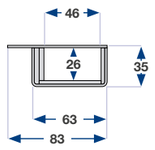

Top view Steel

REAR PILLAR 1200 MM BBE

LEFT	RIGHT	MTRL
512701	512801	Steel

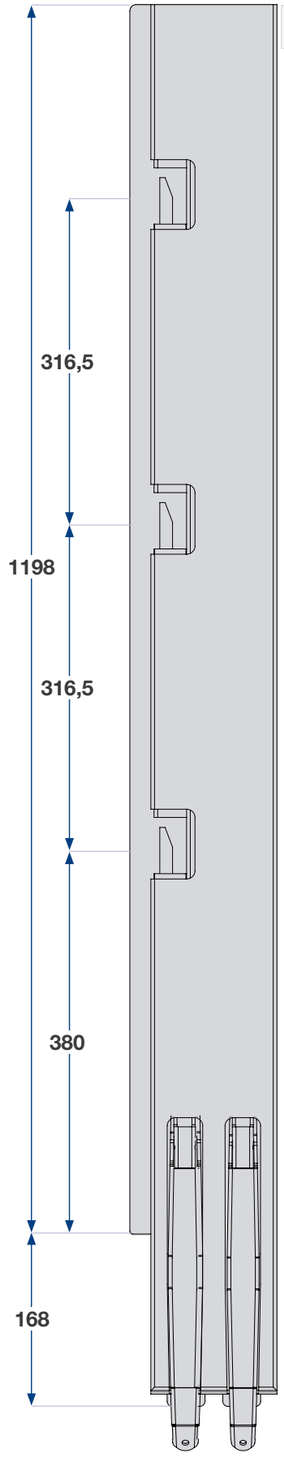

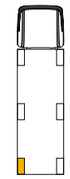

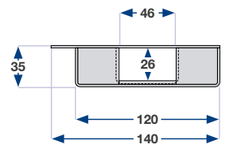

Top view Steel

REAR PILLAR 1200 MM BBD

LEFT	RIGHT	MTRL
512901	512001	Steel

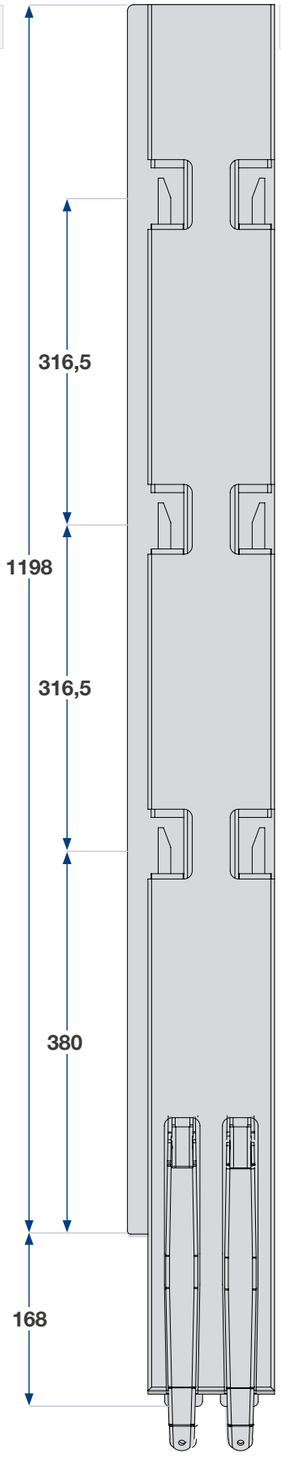

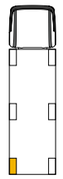

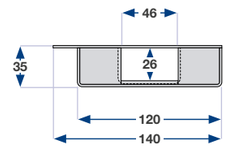

Top view Steel

K5 DROPSIDE LOCK PILLAR

Accessories

PART NO.	DESCRIPTION
030021	K5 Dropside catch Welding untreated
030022-05	K5 Dropside catch Fe/Zn8/P1/T2 Blank
030023-05	K5 Dropside catch Fe/Zn8/P1/T2 Blank
030030-05	K5 Dropside catch Rear-pillar Fe/Zn8/P1/T2 Blank

030021

030022-05

030023-05

030030-05

PART NO.	DESCRIPTION
035010	K5 Pillar support standard welding untreated
035010-KBS	K5 Pillar support short-bended side welding
035010-US	K5 Pillar support no sides welding untreated
035011	K5 Pillar support 63 mm

035010

035010-KBS

035010-US

035011

PART NO.	DESCRIPTION
034140	K5 Kinnetop profile

034140

PART NO.	DESCRIPTION
030250	K5 Top-cover side/rear 120 mm
030260H	K5 Top-cover Front-pillar right 63 mm
030260V	K5 Top-cover Front-pillar left 63 mm

030250

030260H

030260V

PART NO.	DESCRIPTION
035920	K5 Exchange handle Repair kit

035920

Material

Product family K5 dropside locks	**Strength/Certificate** Certified to EN 12642
Applications Locking system for dropside locks with dropside heights from 400 mm. For heavy vehicles.	**Quality** Kinnegrip is certified to ISO 9001:2015 ISO 140001:2015
Material Steel (HSLA) a hot-rolled, high-strength, low-alloy material that has uniform quality and excellent machining properties. Included articles are made of steel and glass fiber reinforced polyamide.	**Maintenance** We recommend soap products with a pH of 6-8 when cleaning. After cleaning, surfaces it should be rinsed with water. Mechanism and moving parts should be lubricated regularly.
Surface treatment The product is available in ED-coated design, electrocoating which gives good penetration into cavities and even layers and high finish. To obtain an optimal corrosion protection, ED coating must always be reinforced with subsequent powder coating.	**Environmental impact & recycling** Kinnegrip AB is environmentally certified to ISO 14001. This means that we have control of our routines, conduct active environmental work and constantly strive to minimize our impact on the environment. Kinnegrip's products are manufactured exclusively from steel and aluminium, which means that they can be recycled completely. Of course, we choose materials based on IMDS*, a system that allows us to comply with international standards, laws and regulations.

** IMDS (International Material Data System) is the automotive industry's material data system and has become a global standard used by nearly all global OEM manufacturers. IMDS collects all materials used for automotive production, maintenance, analysis and archiving. Using IMDS enables the producer to fulfil the obligations imposed on vehicle manufacturers, and thus on their suppliers, according to national and international standards, laws and regulations.*

Kinnegrip AB
Lindhagsgatan 6
531 40 Lidköping
SWEDEN

+46 510 890 00

info@kinnegrip.se

Find our products at our
local distribution partners

kinnegrip.se

Kinnegrip.
SAFETY ON THE ROAD